STORMYTHOS

# GRINCH 8

@stormythos
stormythos@gmail.com

© 2019 Stormythos. All rights reserved.

# Hello!

Thank you for downloading my custom building instructions.

I hope you have an enjoyable building experience!

– *Stormythos*

© 2019 Stormythos. All rights reserved.
All contents are for **personal use only**.
Any unauthorised duplication, modification, reproduction or sale of this model and/or these instructions in whole or in part is **strictly prohibited**.
LEGO® is a trademark of the LEGO Group of companies which does not sponsor, authorise or endorse this model and/or these instructions.

8x
4070, 11

5x
3023, 11

5x
4032, 11

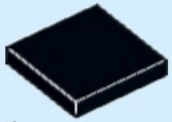
1x
3068b, 11

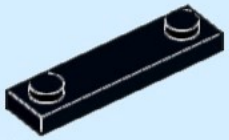
1x
92593, 11

1x
2431, 11

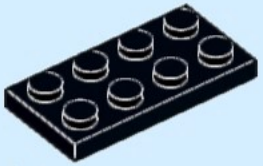
1x
3020, 11

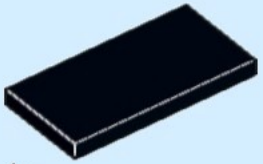
1x
87079, 11

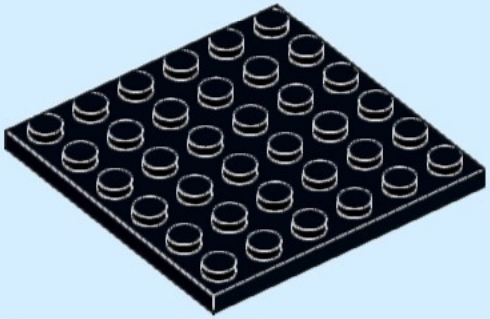
1x
3958, 11

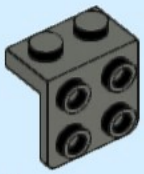
1x
44728, 85

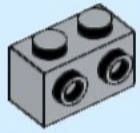
2x
11211, 86

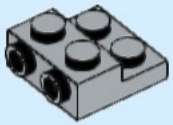
6x
99206, 86

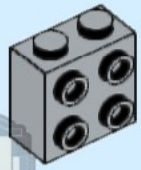
6x
22885, 86

4x
24246, 1

2x
98138, 1

2x
3024, 1

4x
36840, 1

1x
26047, 1

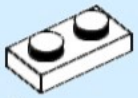
6x
3023, 1

1x
3626c, 1

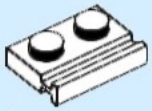
3x
32028, 1

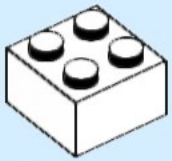
1x
3003, 1

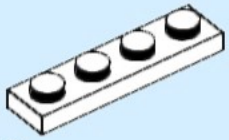
9x
3710, 1

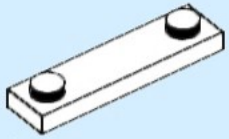
2x
92593, 1

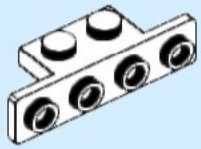
2x
2436b, 1

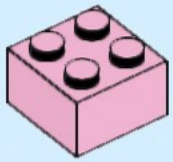
1x
3003, 104

8x
3024, 5

STORMYTHOS

*Quantity*
*Item ID, Colour ID* ***[BrickLink]***

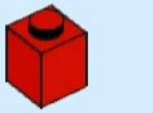
4x
3005, 5

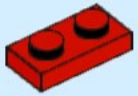
5x
3023, 5

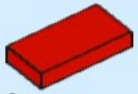
3x
3069b, 5

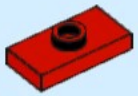
2x
15573, 5

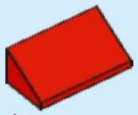
1x
85984, 5

3x
32028, 5

1x
11476, 5

2x
6091, 5

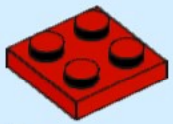
1x
3022, 5

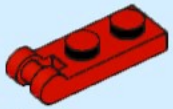
2x
60478, 5

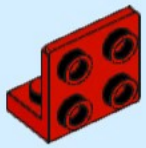
1x
99207, 5

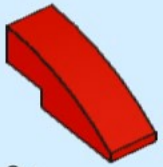
2x
50950, 5

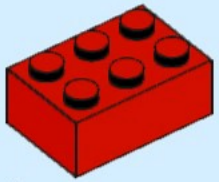
1x
3002, 5

2x
93273, 5

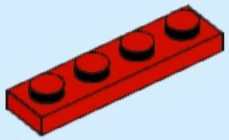
2x
3710, 5

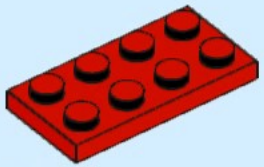
1x
3020, 5

1x
10169, 150

2x
98138pb090, 3

10x
25269, 34

1x
4073, 34

10x
54200, 34

2x
4070, 34

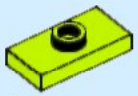
1x
15573, 34

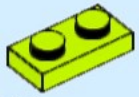
14x
3023, 34

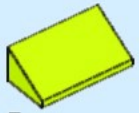
5x
85984, 34

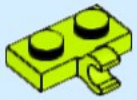
2x
11476, 34

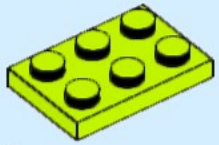
3x
3021, 34

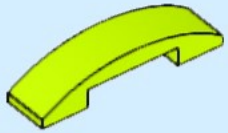
2x
93273, 34

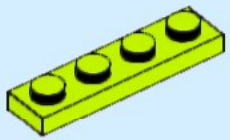
5x
3710, 34

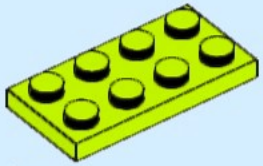
2x
3020, 34

2x
54200, 80

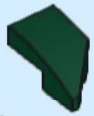
1x
29120, 80

1x
29119, 80

STORMYTHOS

*Quantity*
*Item ID, Colour ID* ***[BrickLink]***

# 1

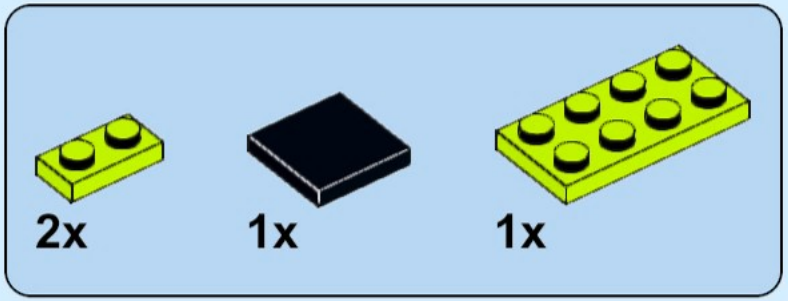


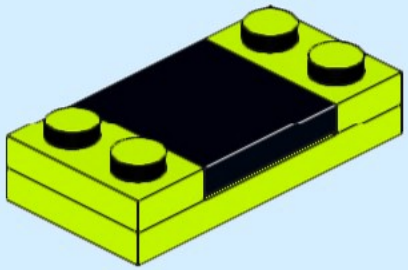

STORMYTHOS

# 2

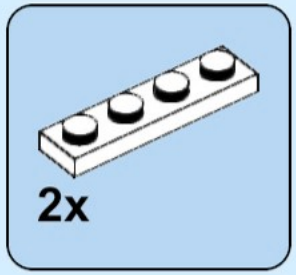


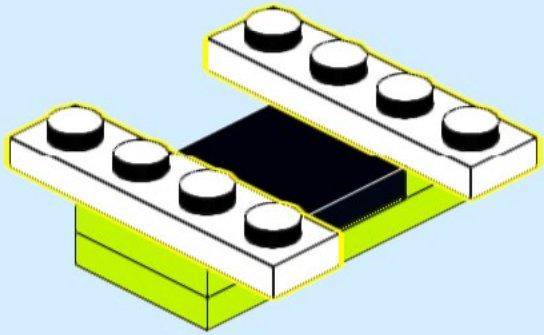

# 3

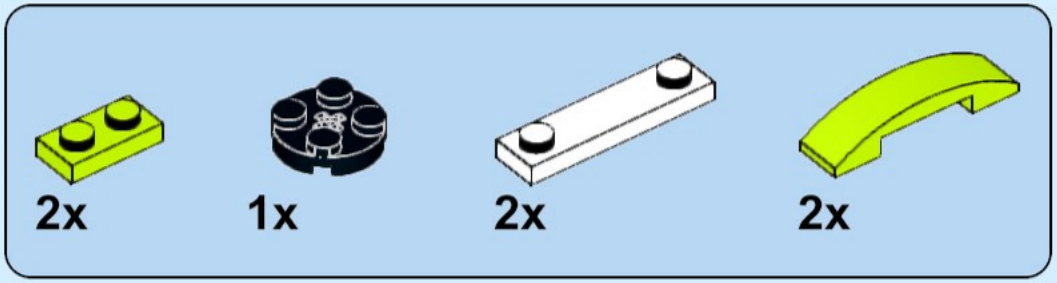


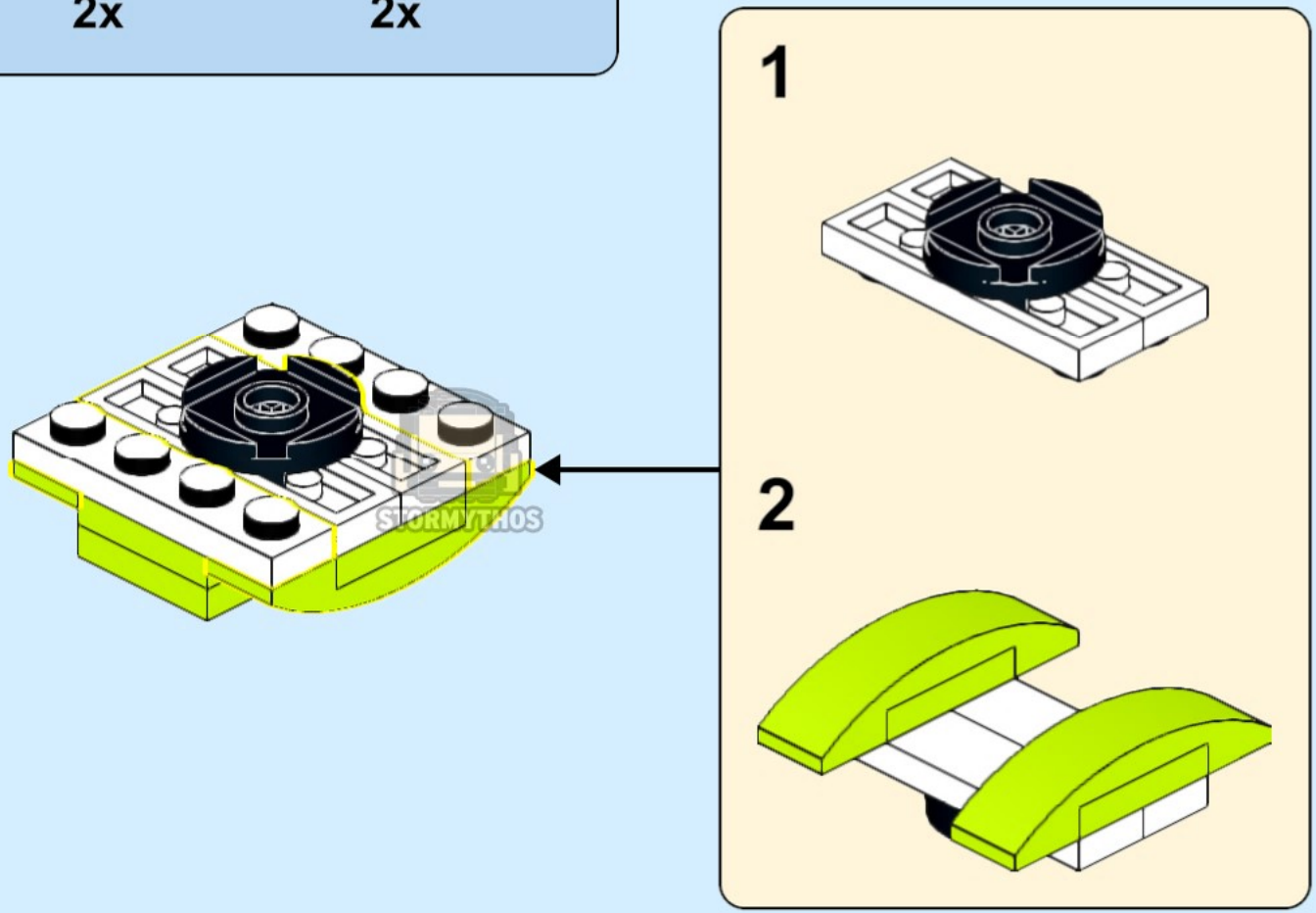

# 4

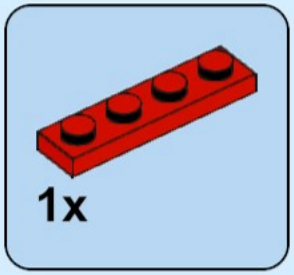


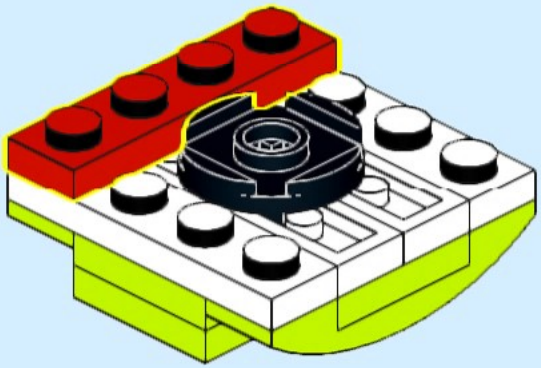

STORMYTHOS

# 5

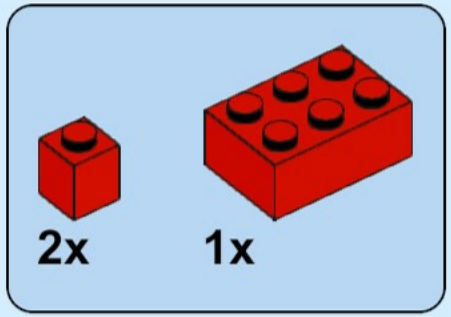


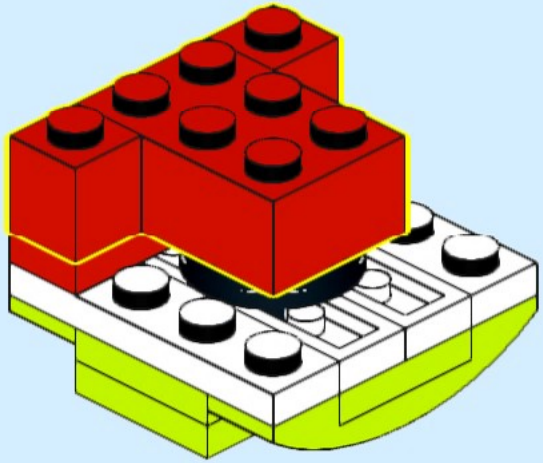

# 6

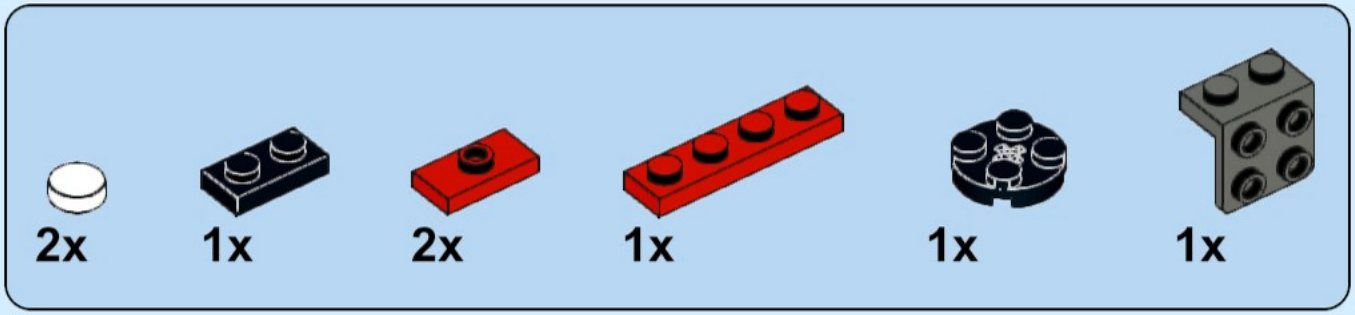


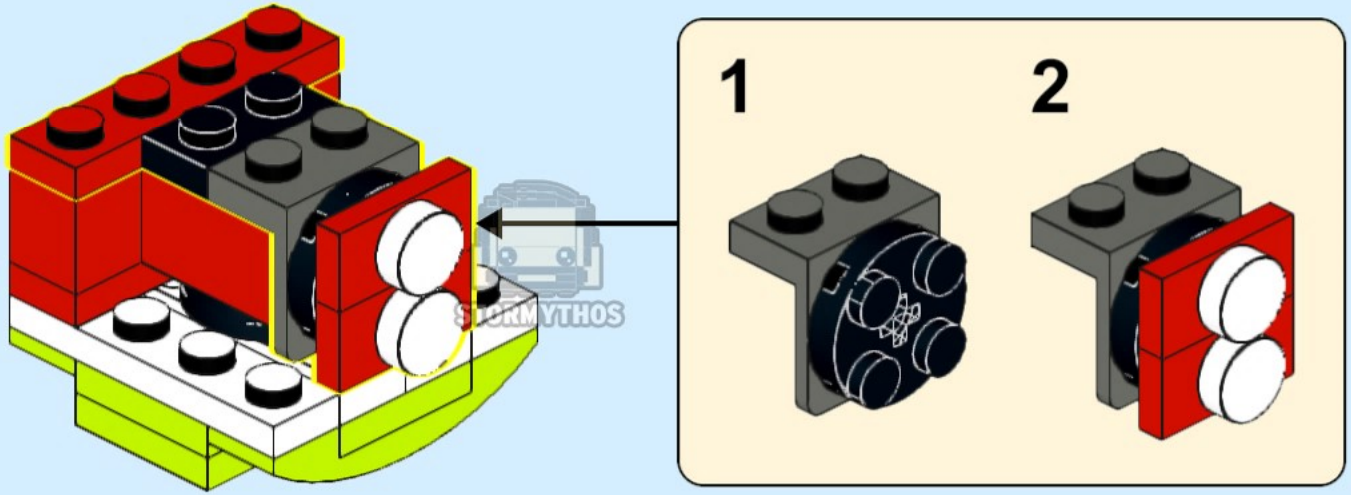

# 7

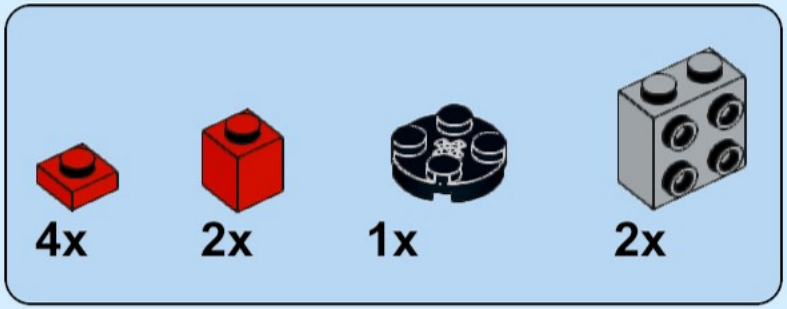


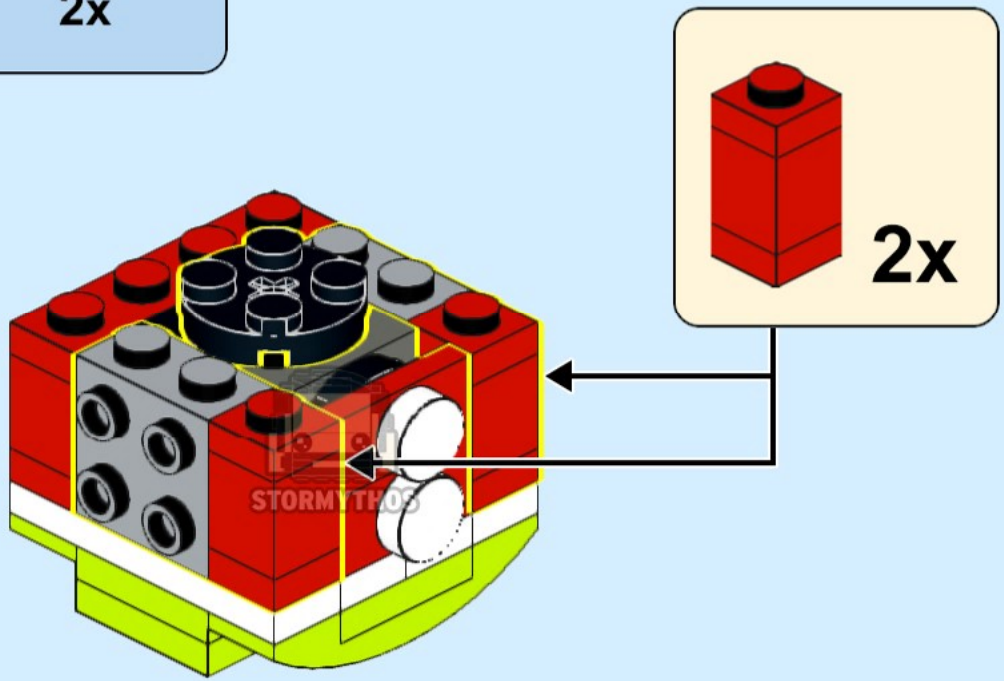

# 8

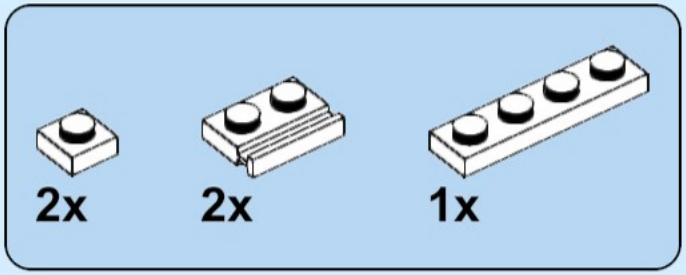


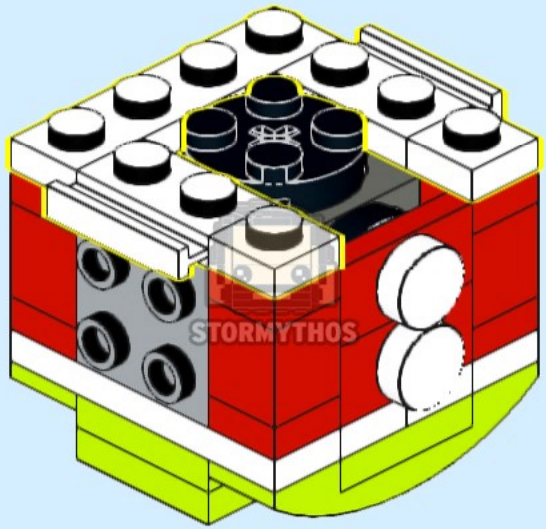

# 9

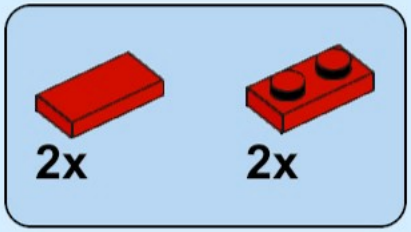


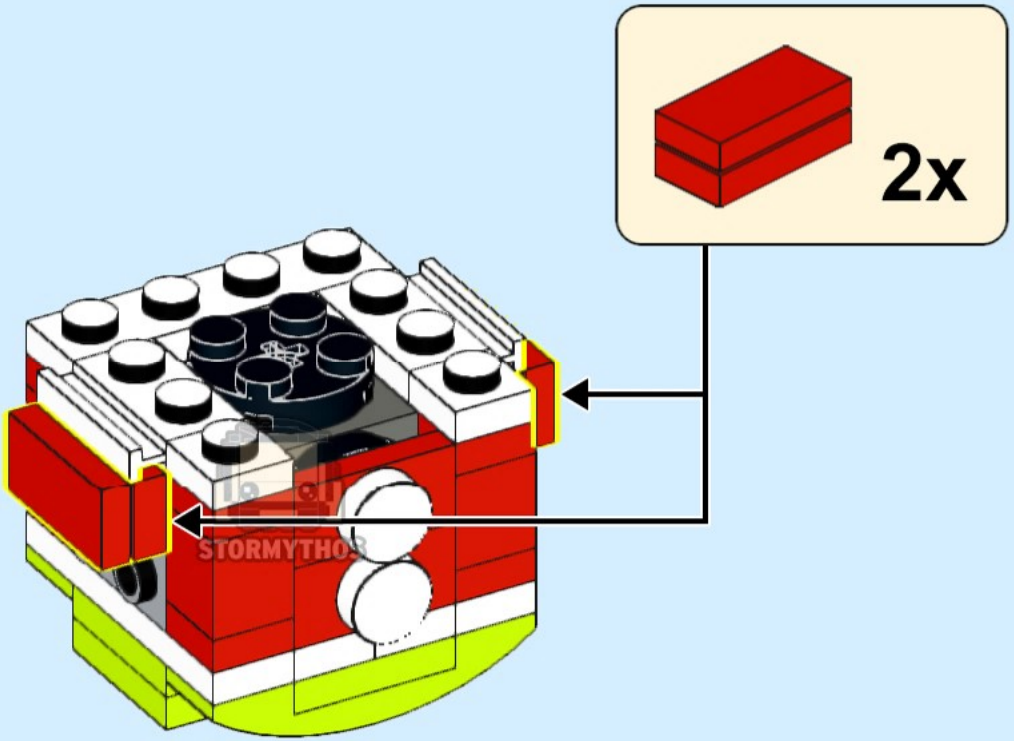

# 10

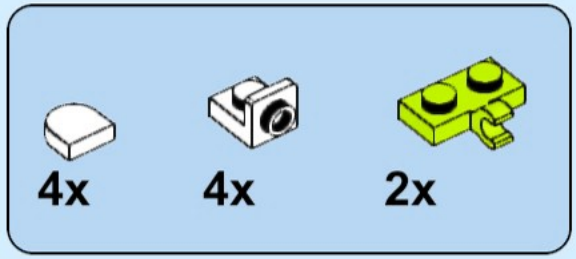


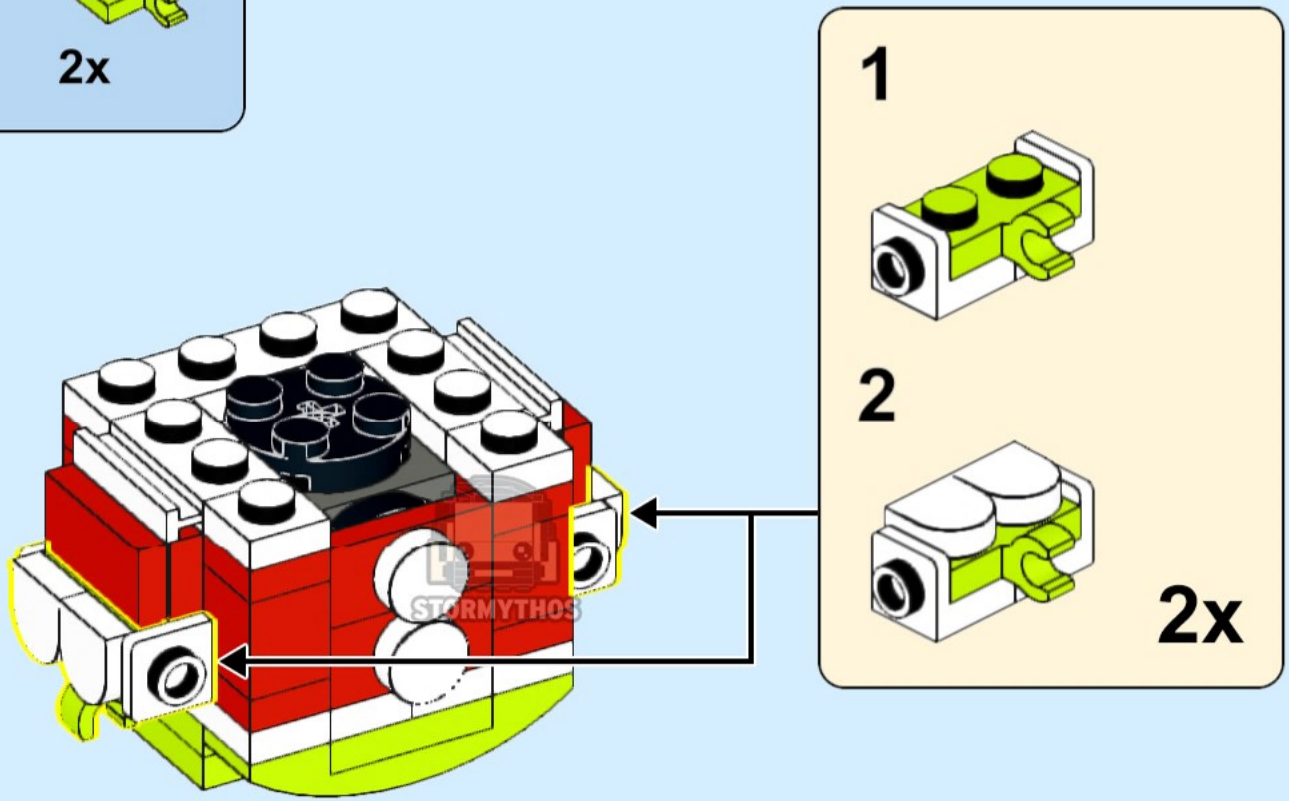

# 11

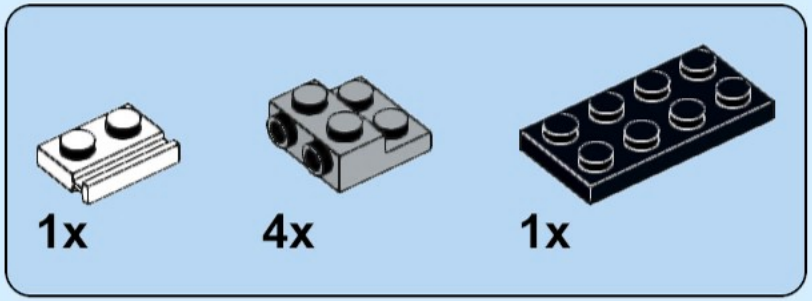


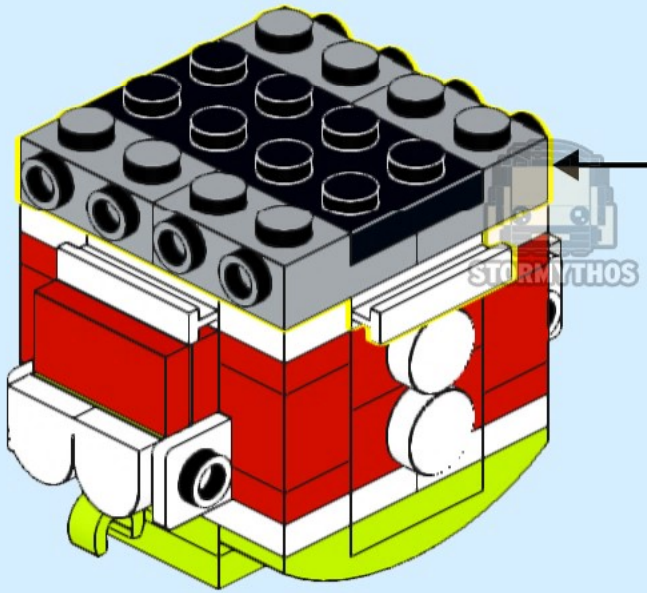


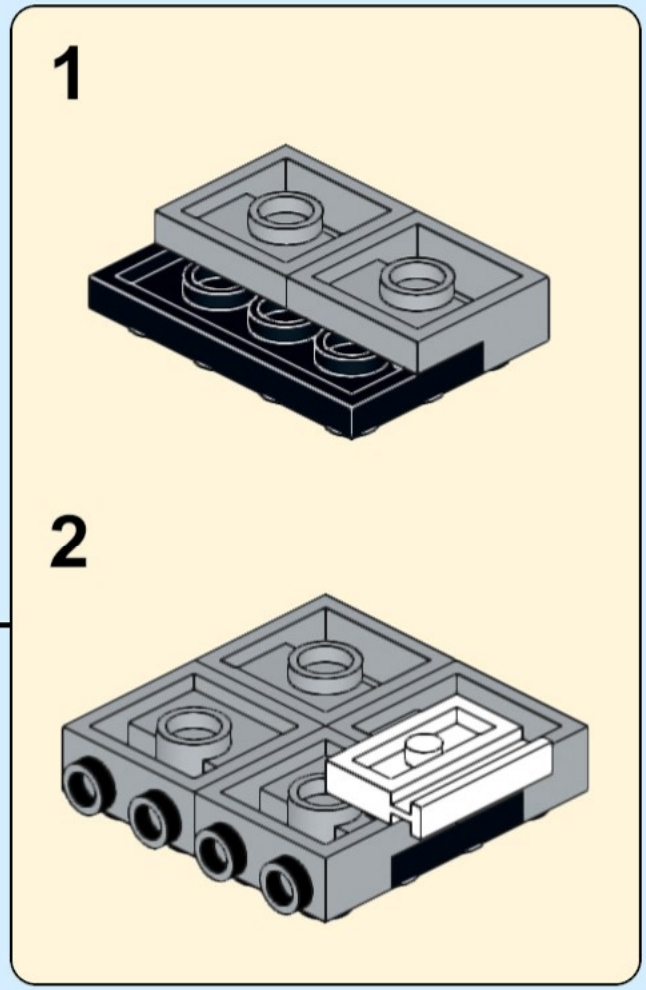

# 12

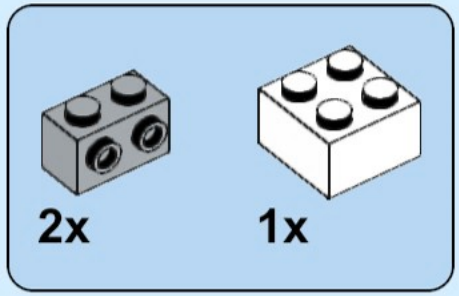


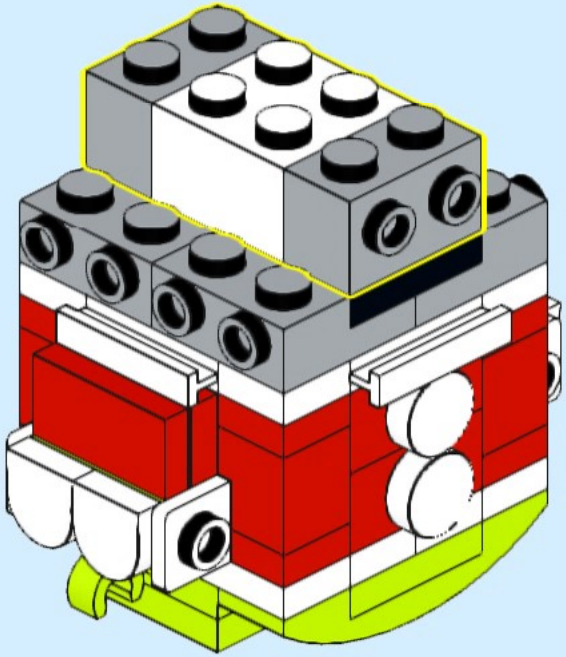

STORMYTHOS

# 13

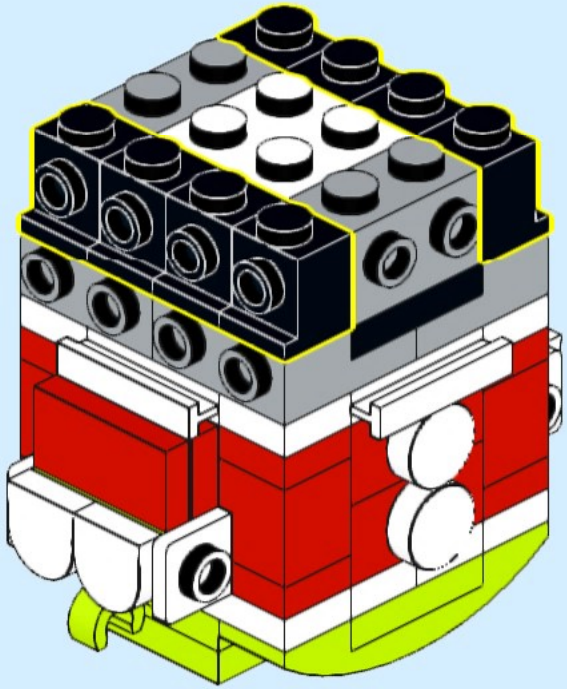

# 14

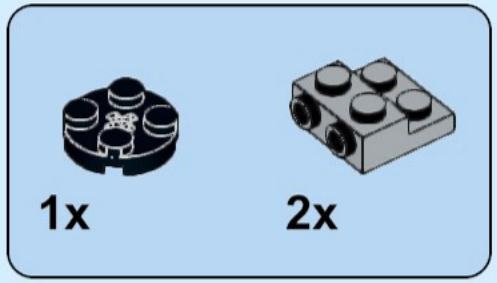


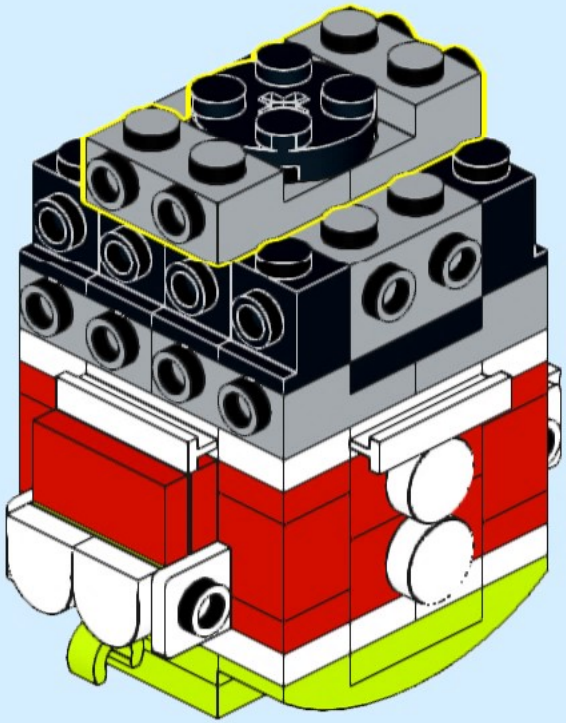

# 15

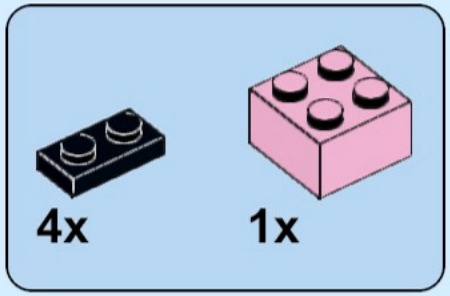


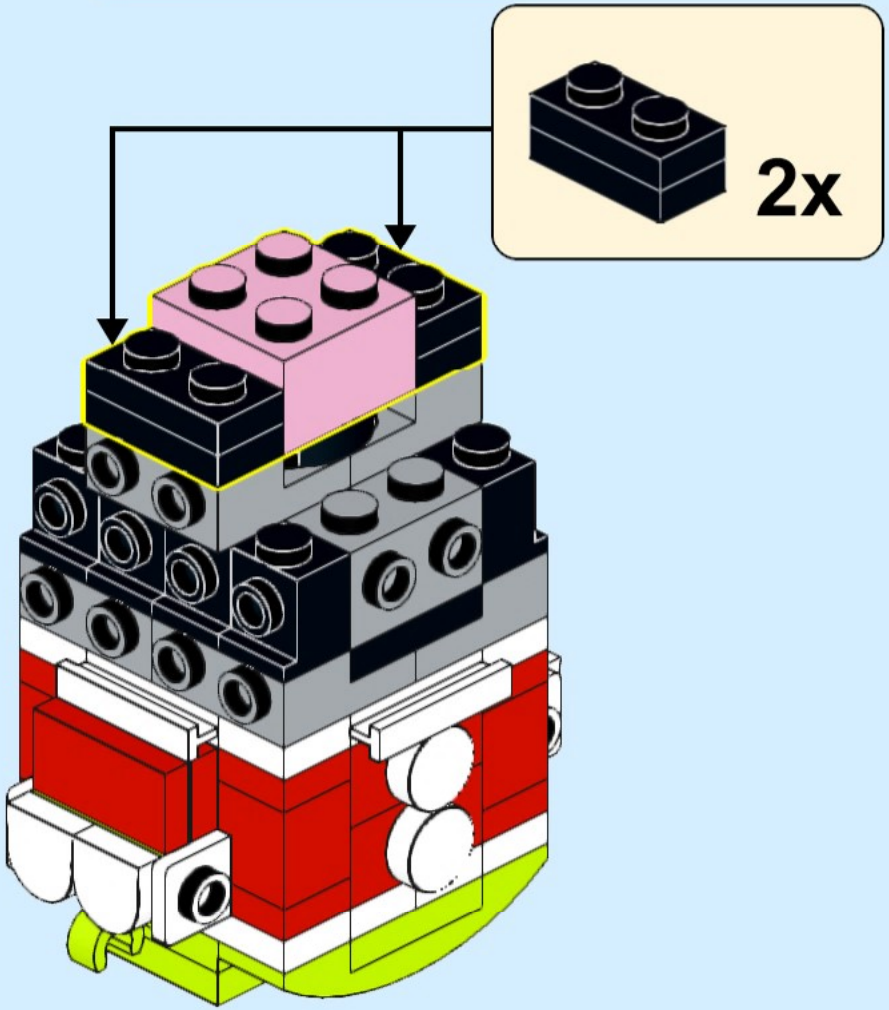


STORMYTHOS

# 16

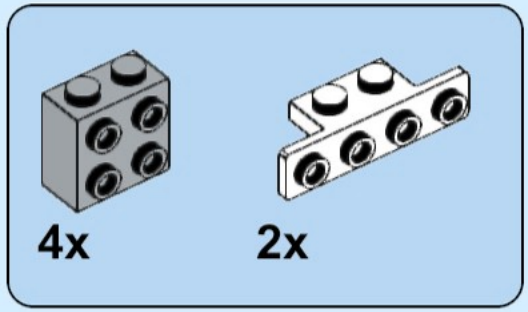


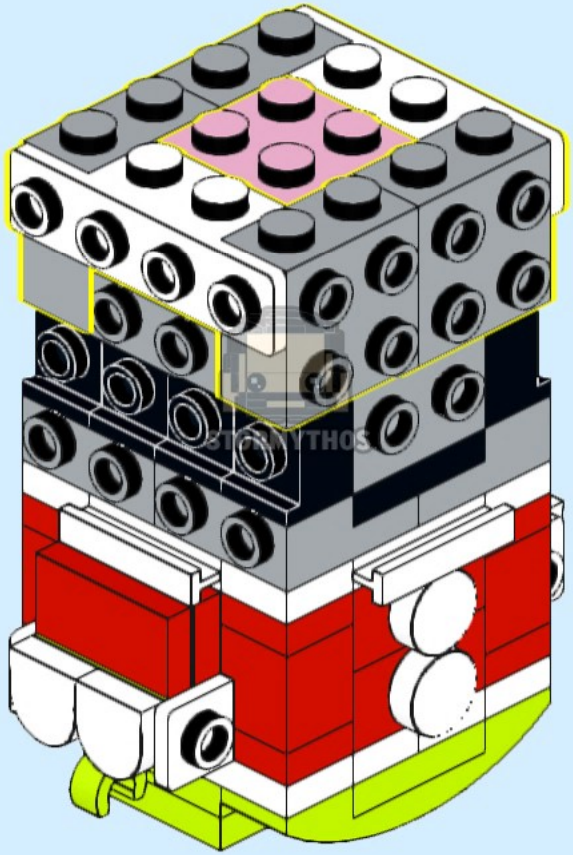

# 17

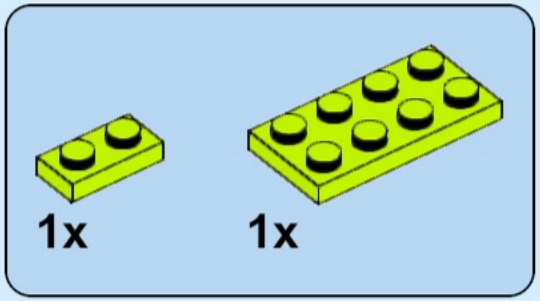


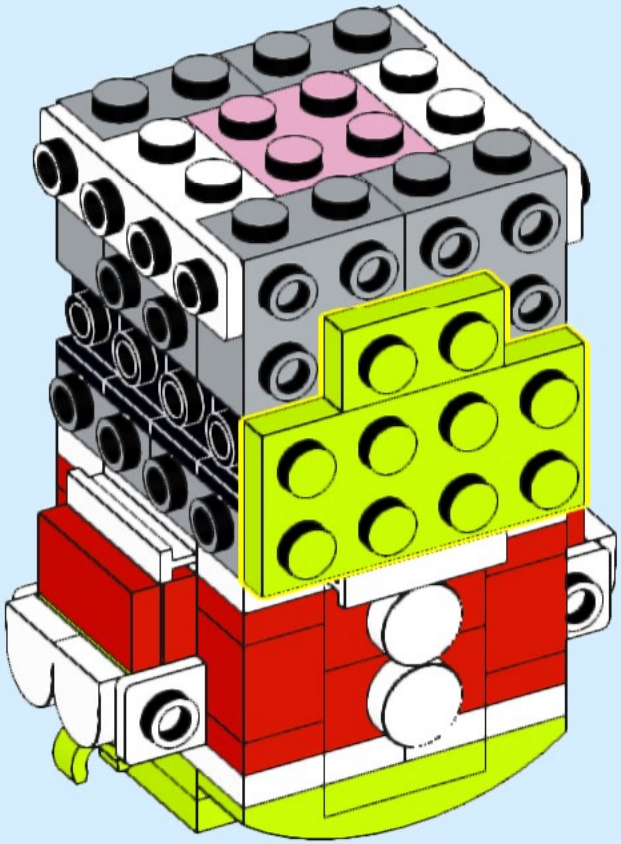

STORMYTHOS

# 18

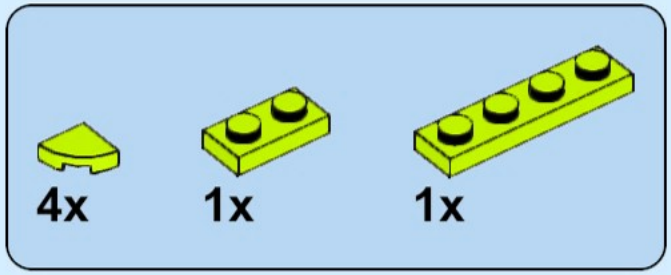


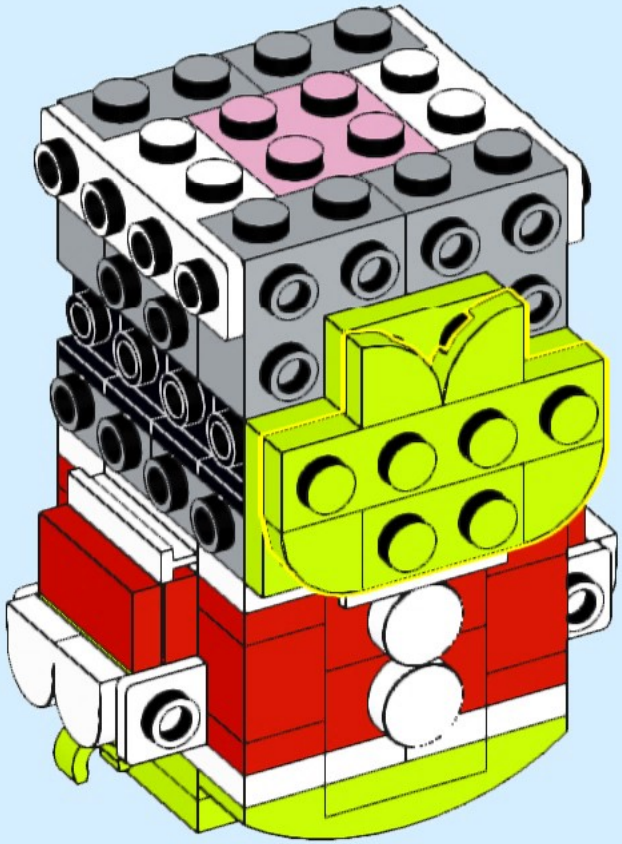

# 19

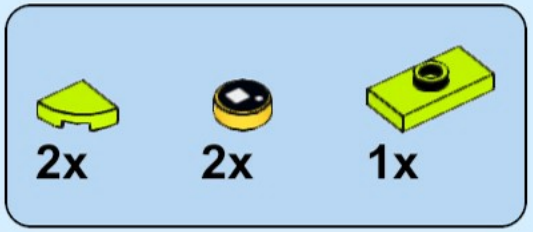


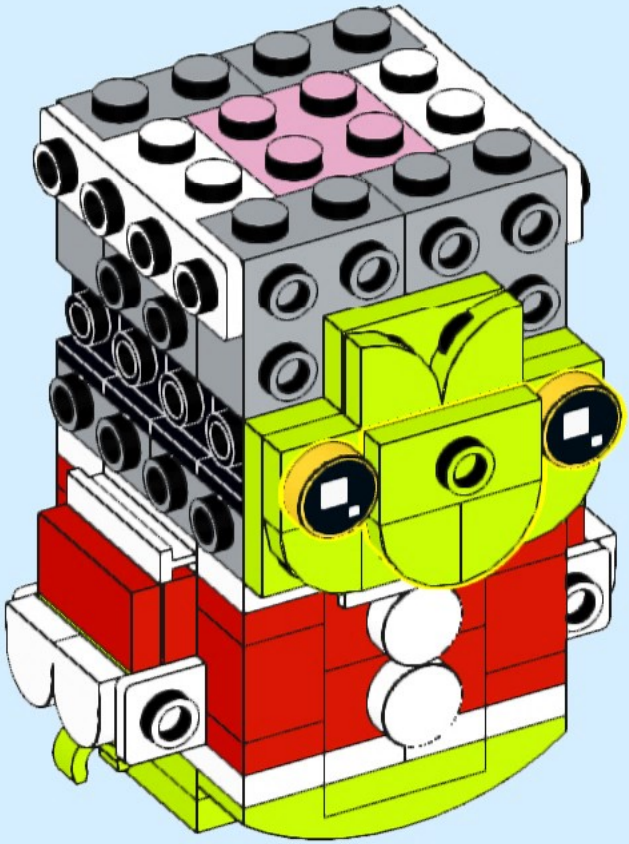

STORMYTHOS

# 20

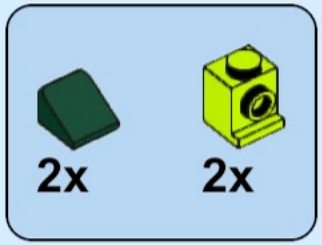


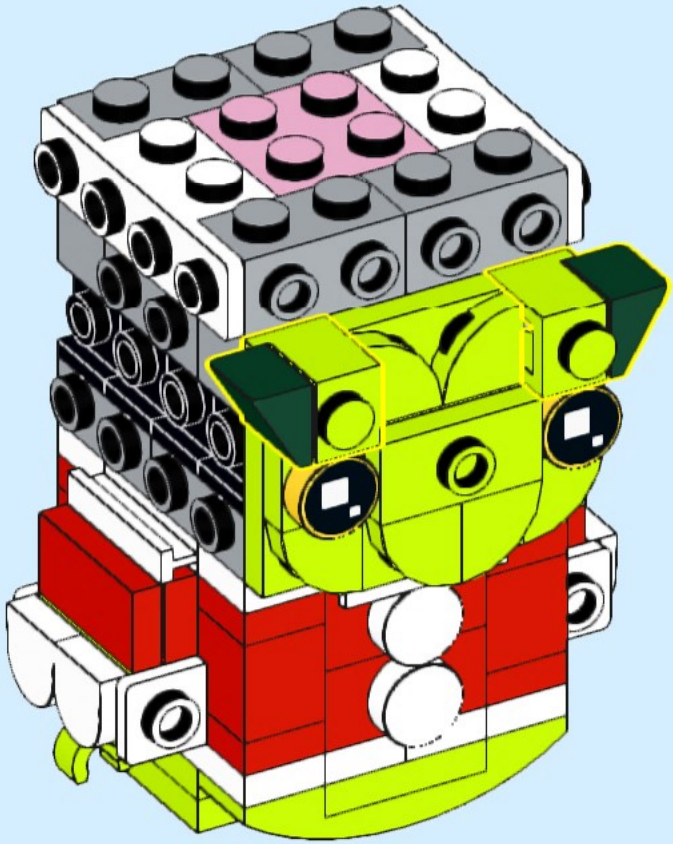

# 21

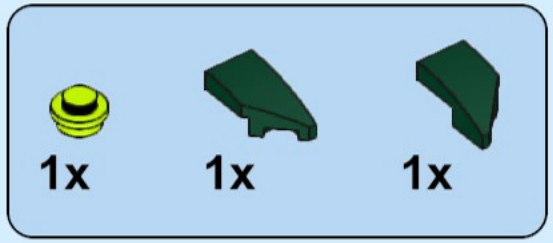


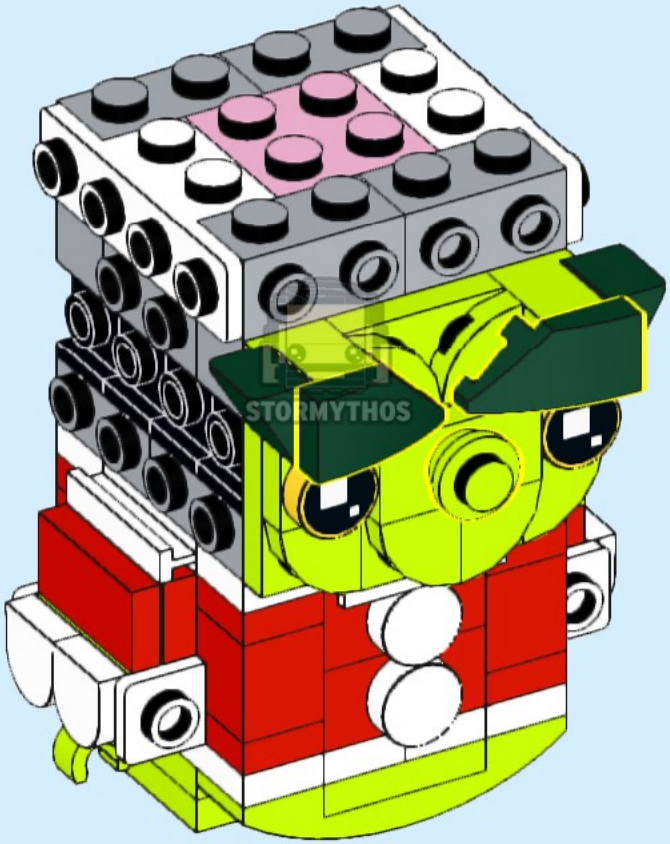

# 22

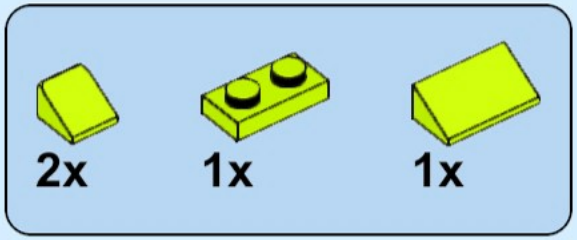


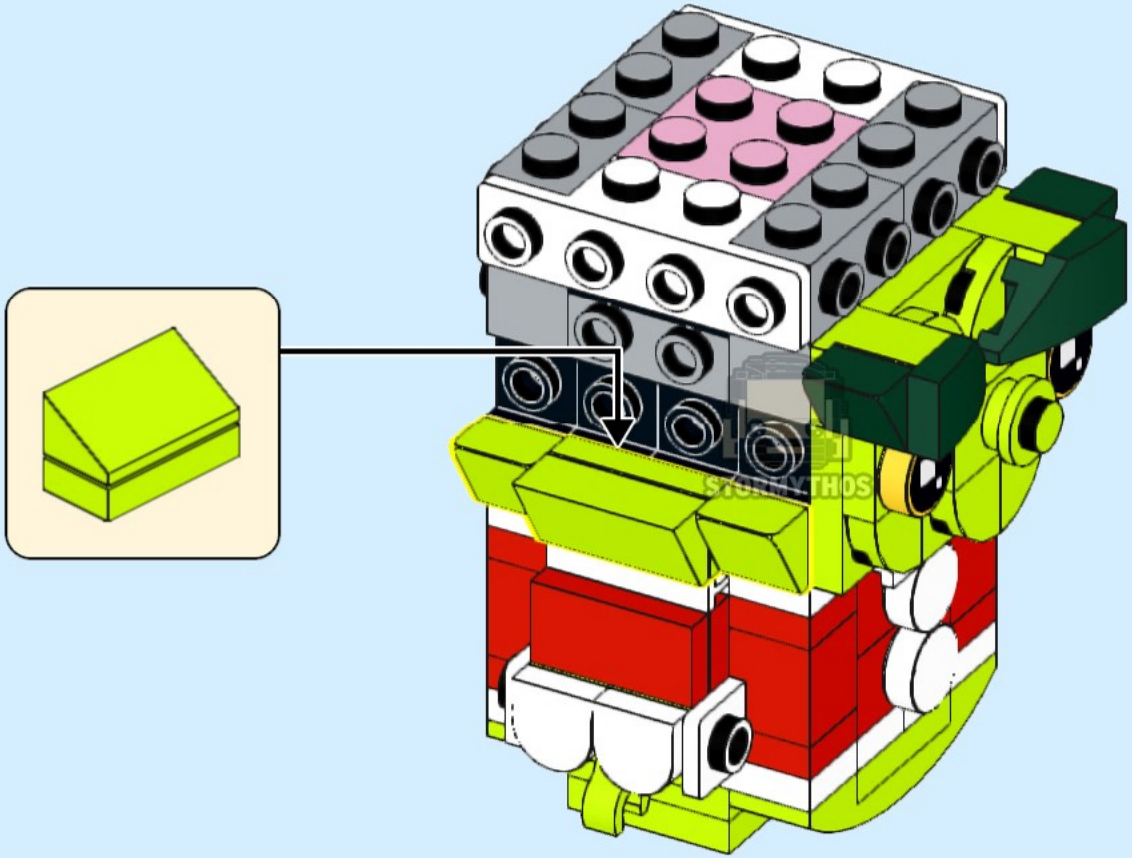

# 23

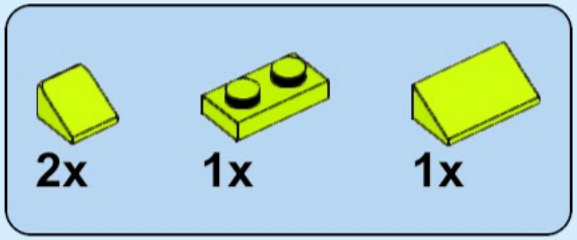


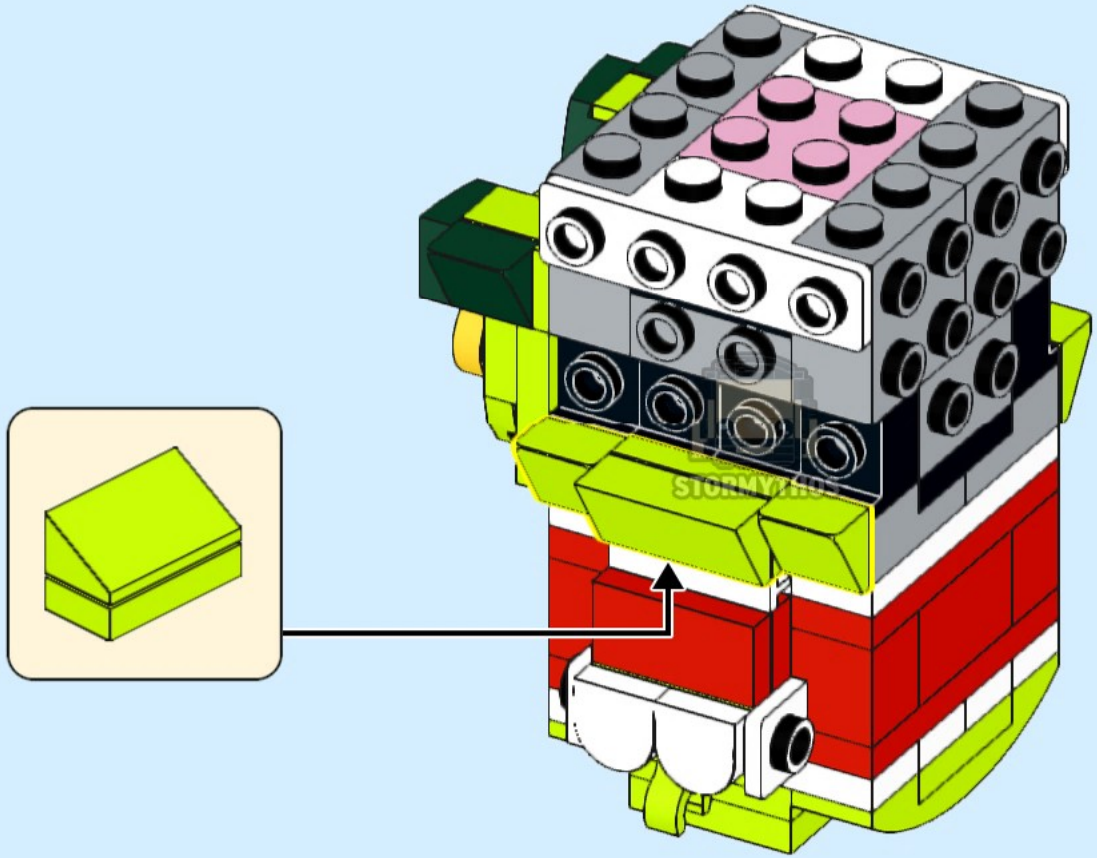

# 24

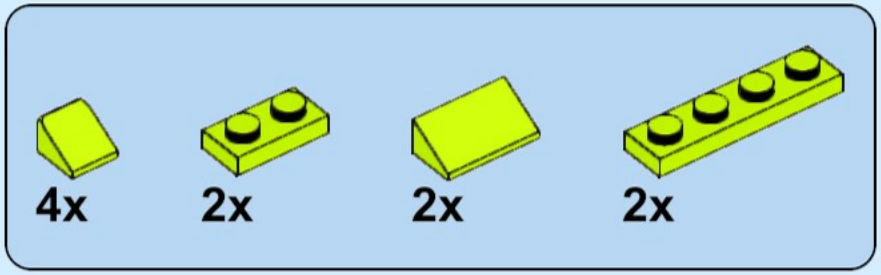


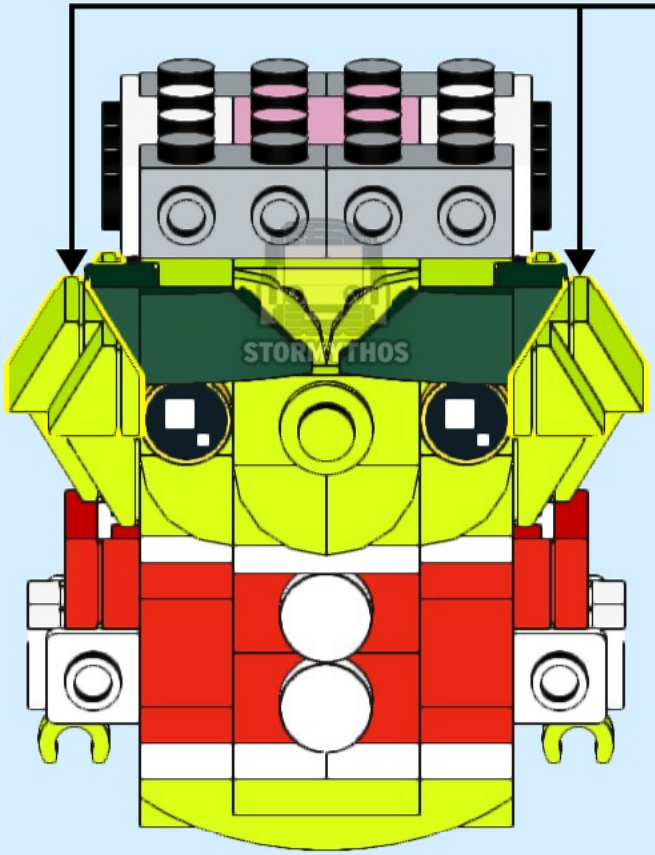

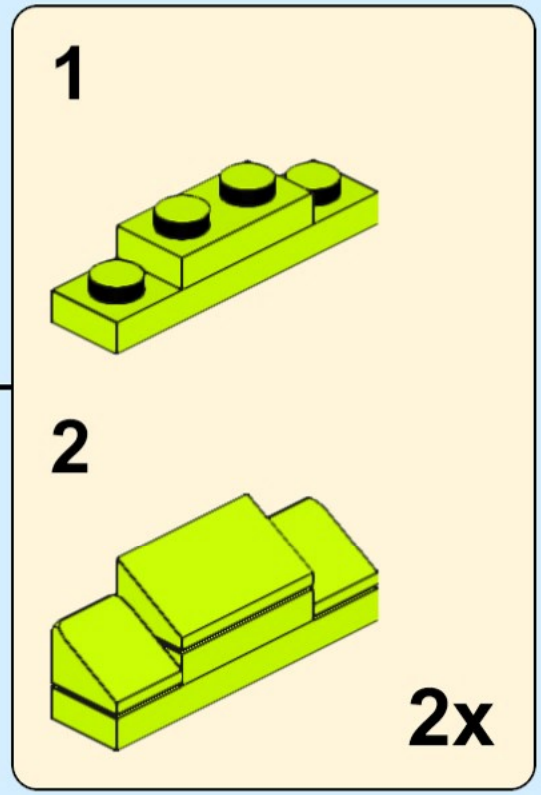

# 25

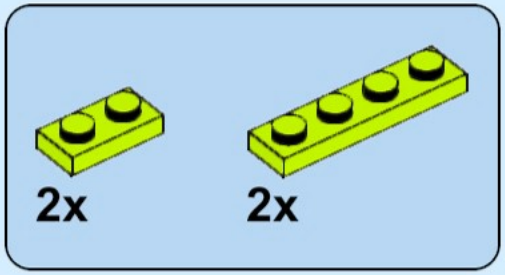


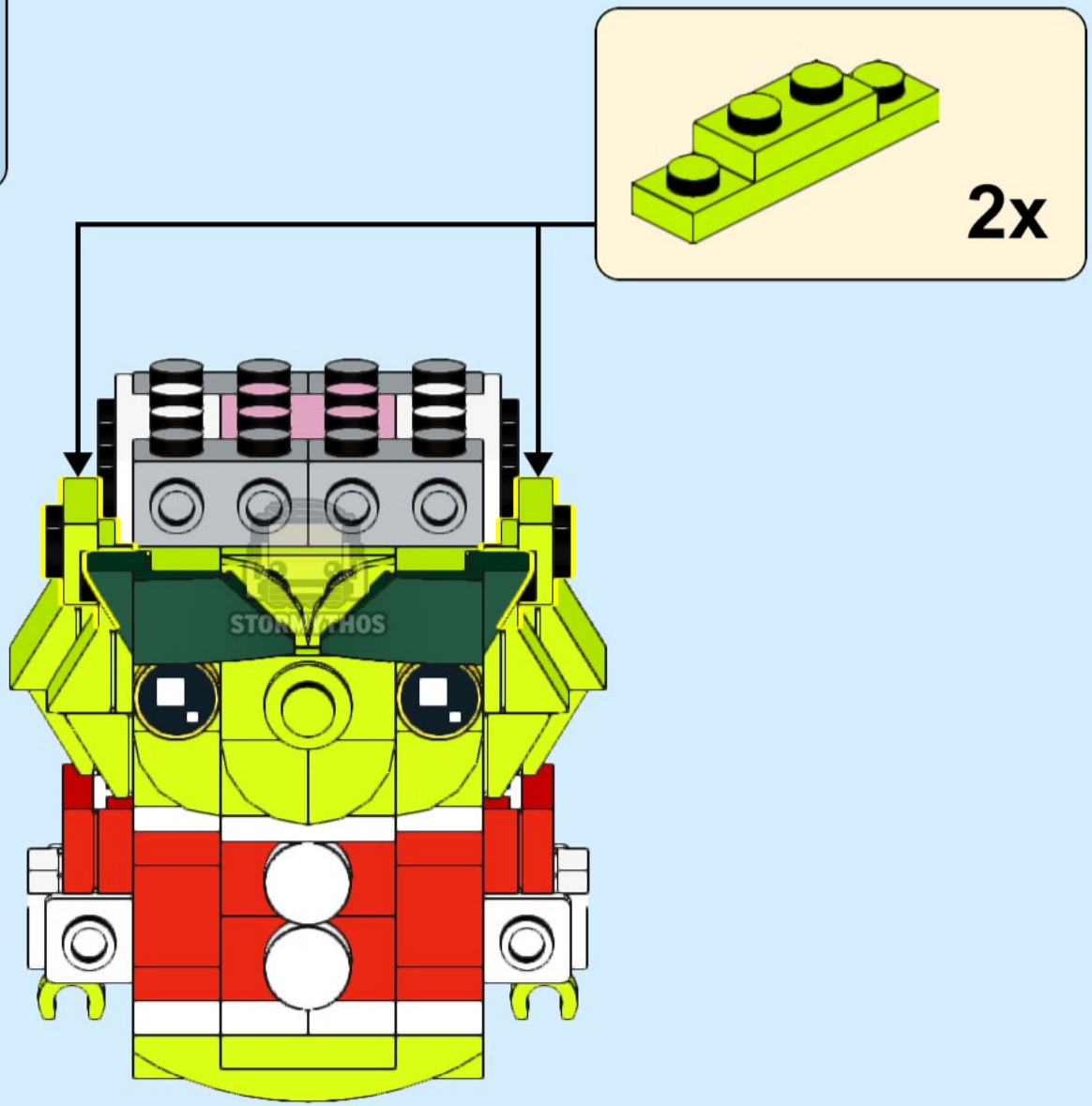

# 26

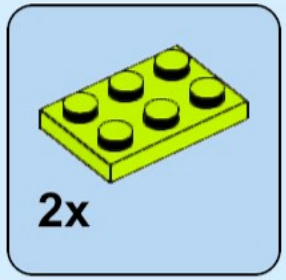


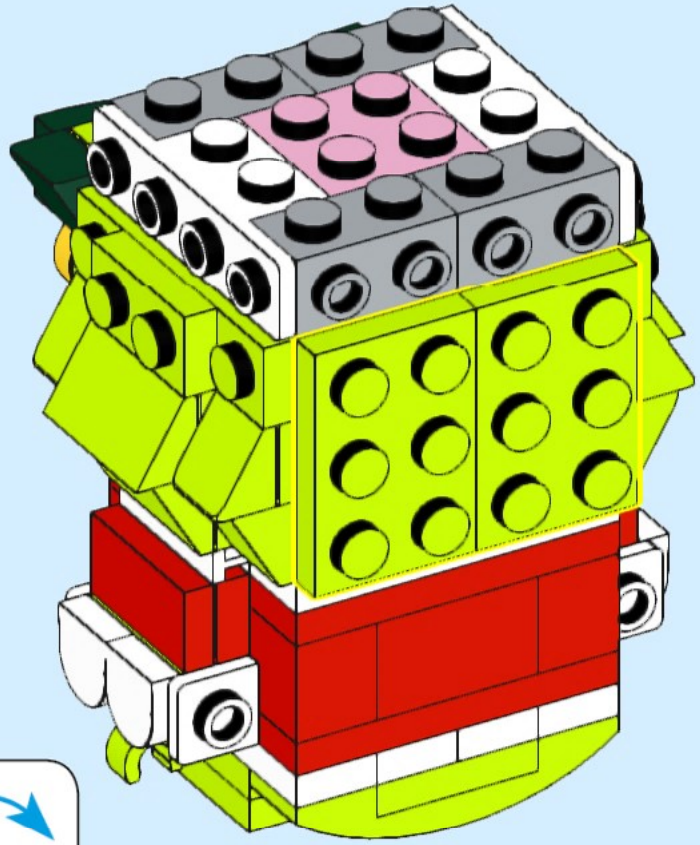

# 27

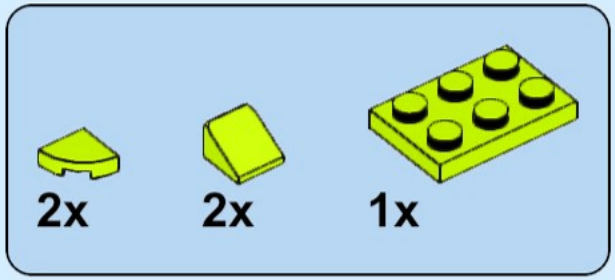


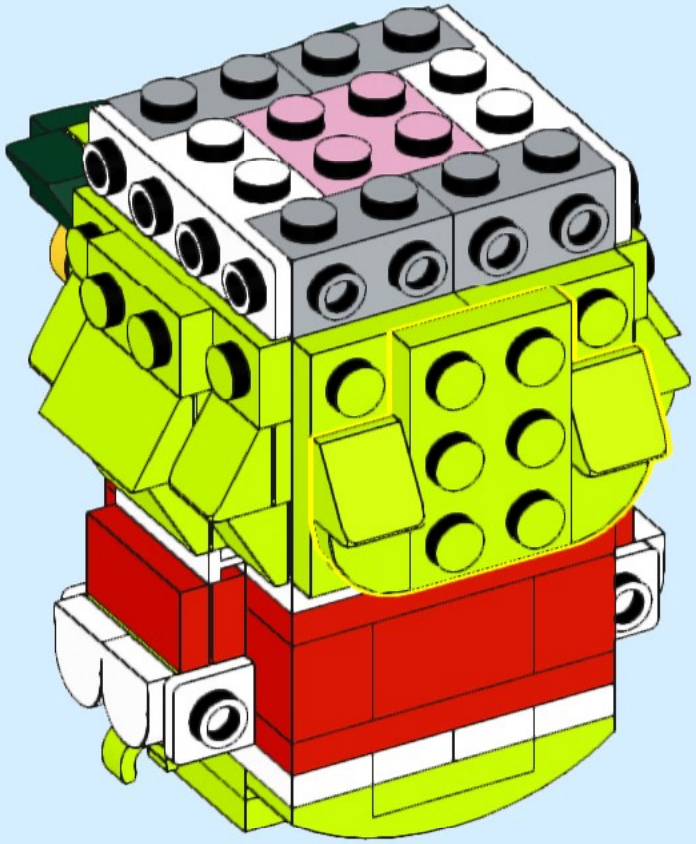

STORMYTHOS

# 28

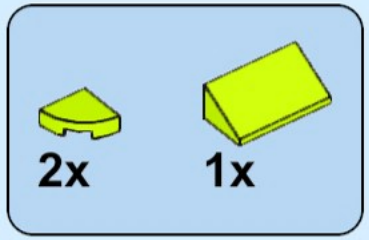


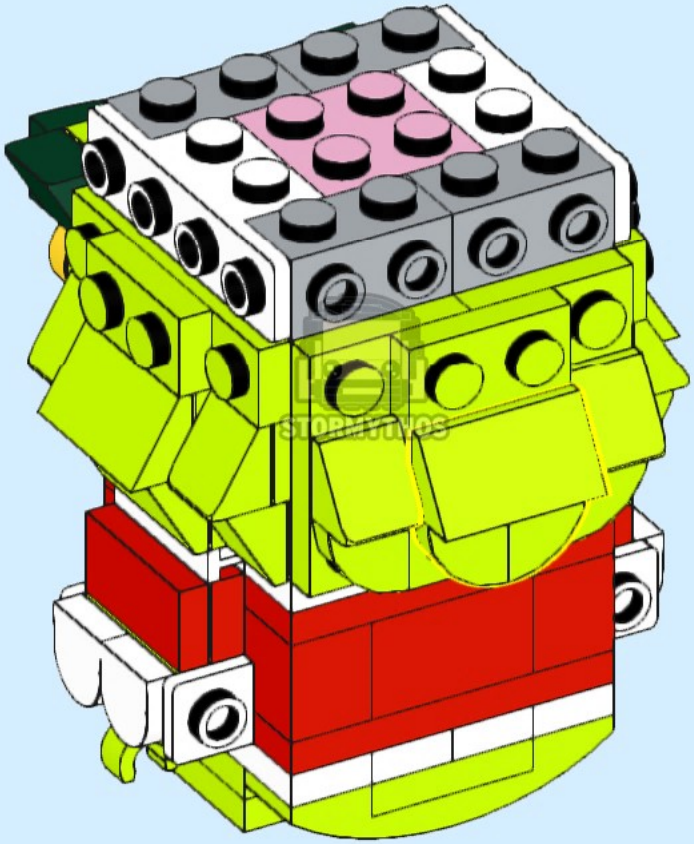

# 29

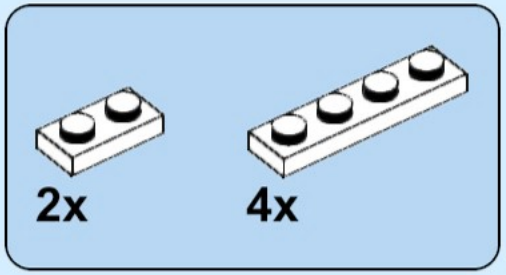


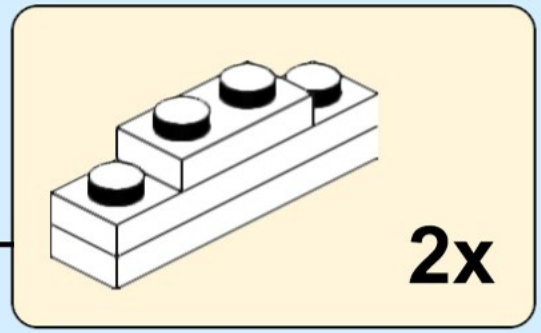


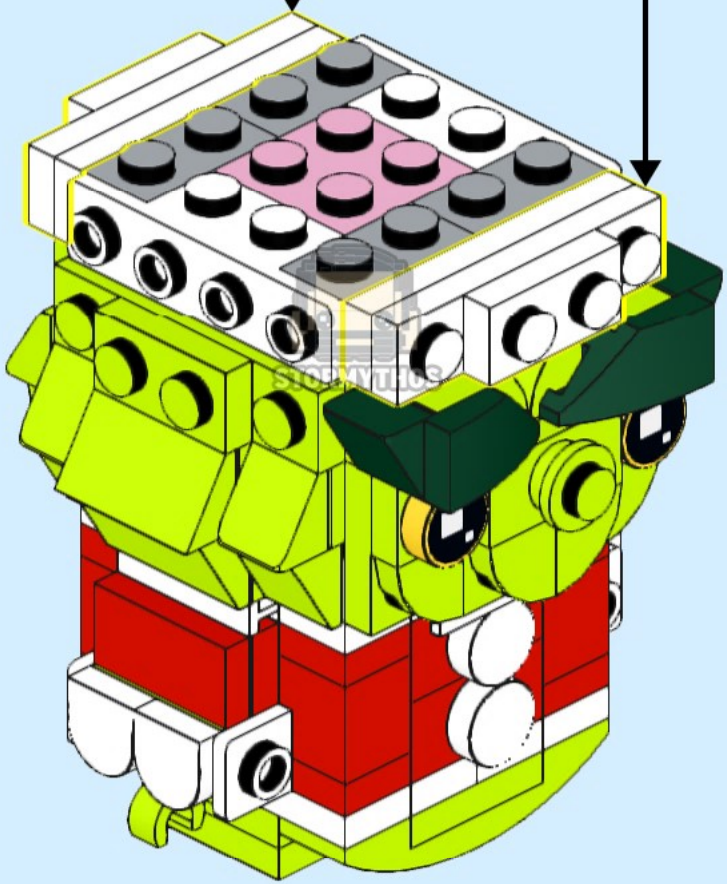

# 30

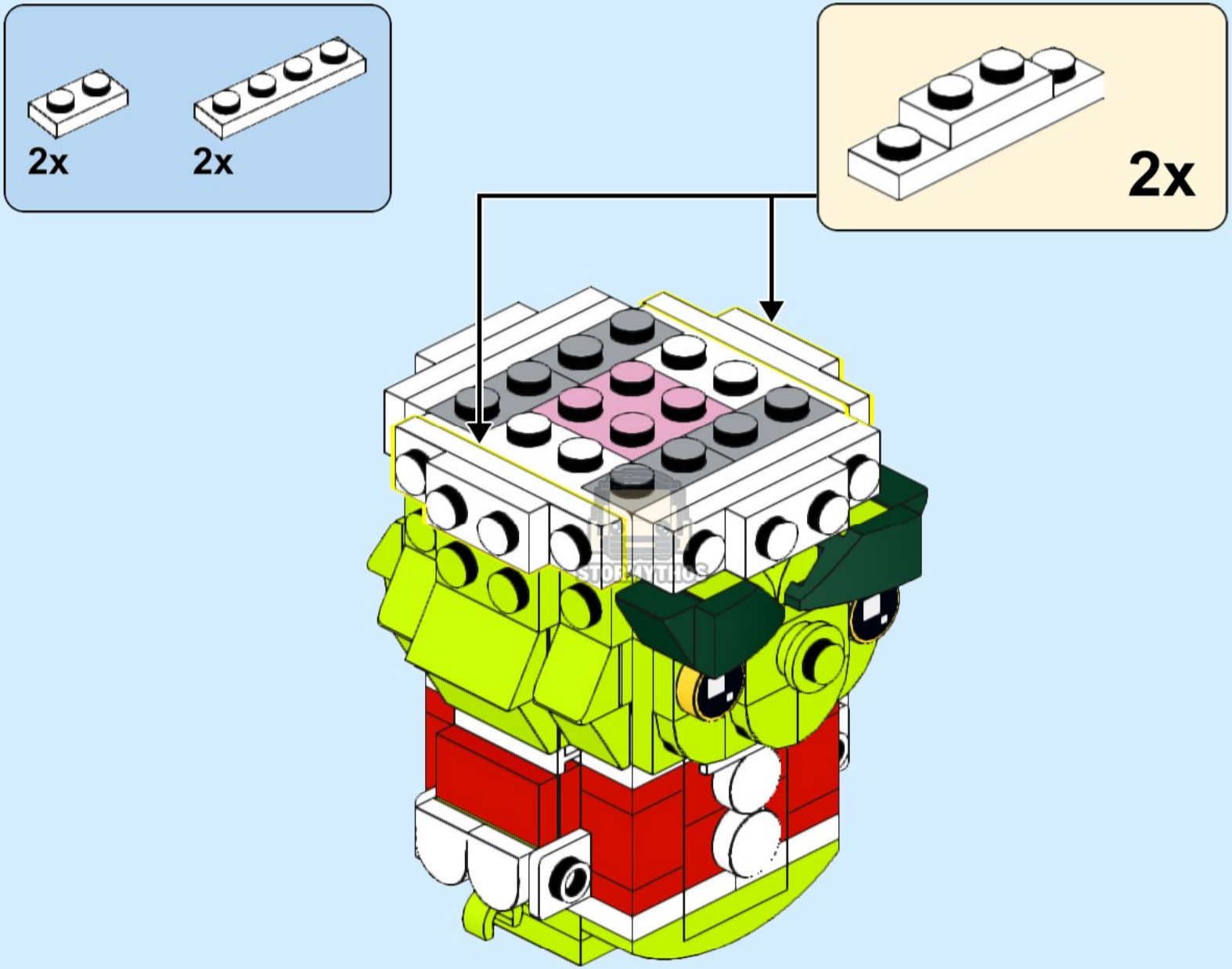

# 31

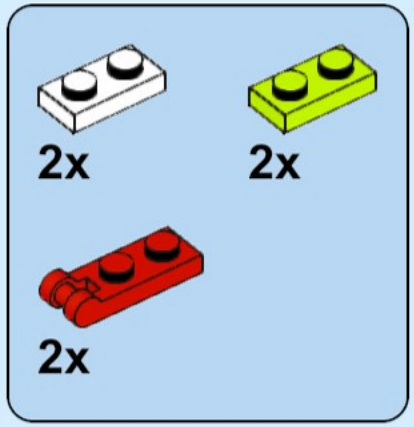


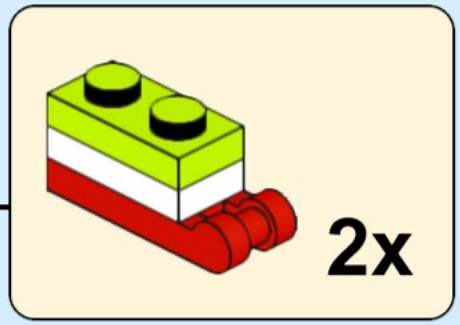


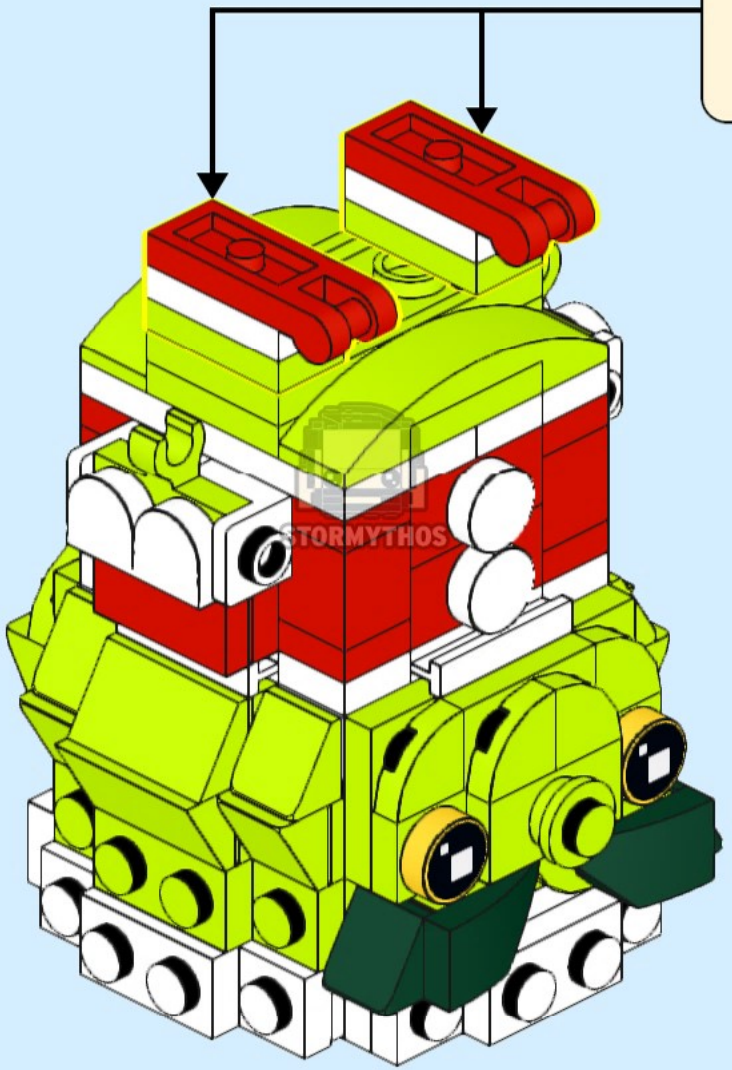

# 32

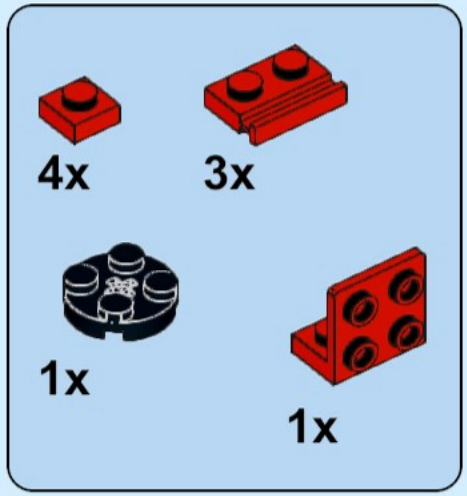


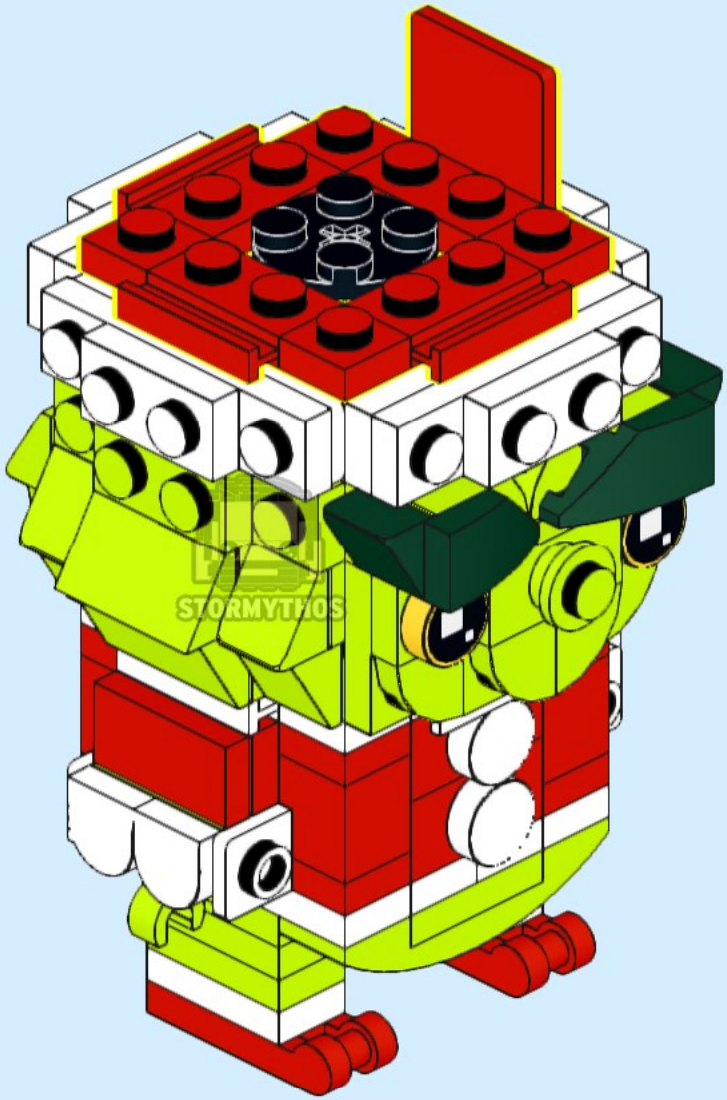

# 33

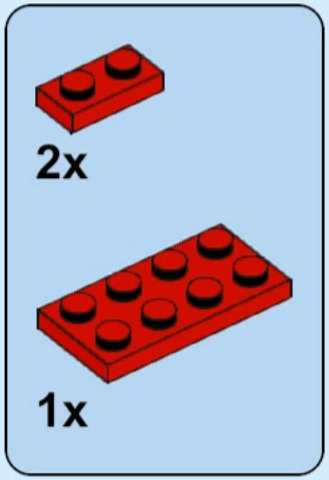


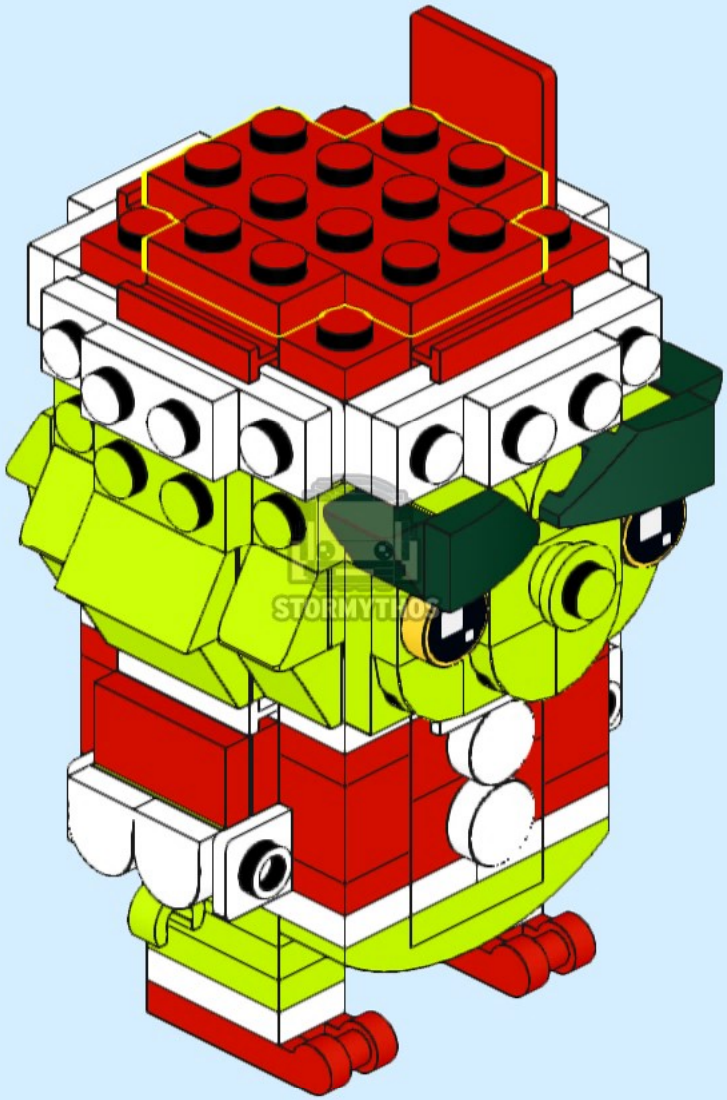

# 34

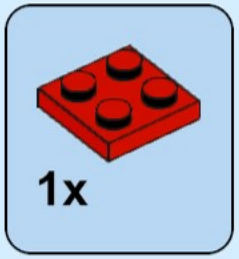


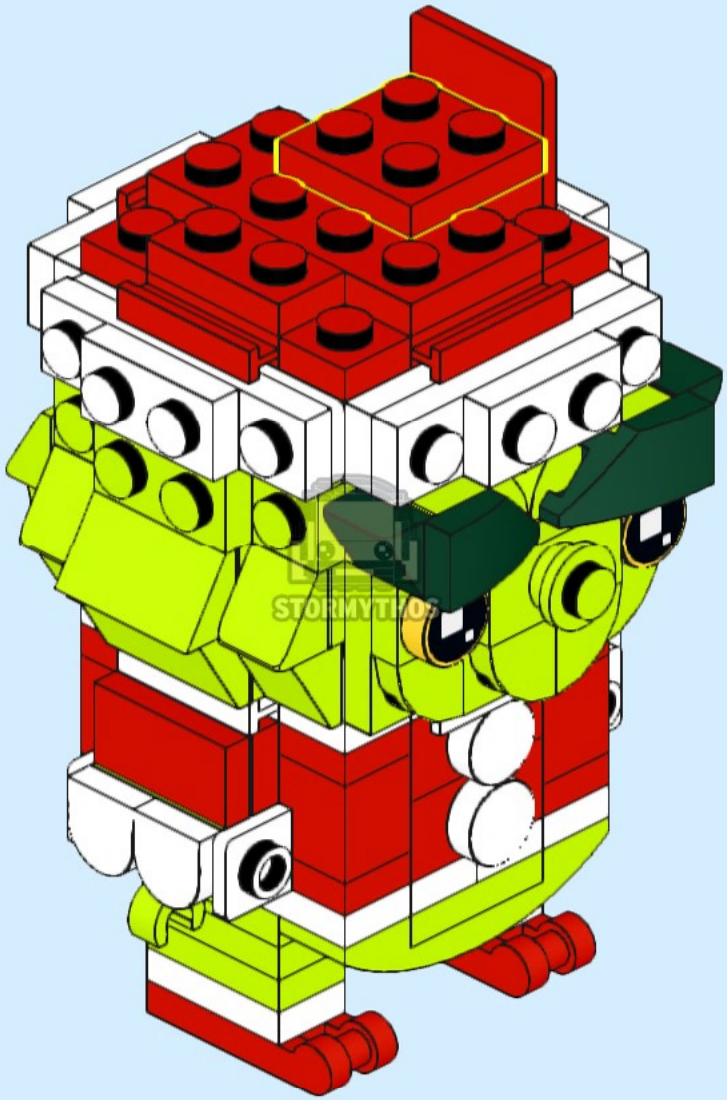

# 35

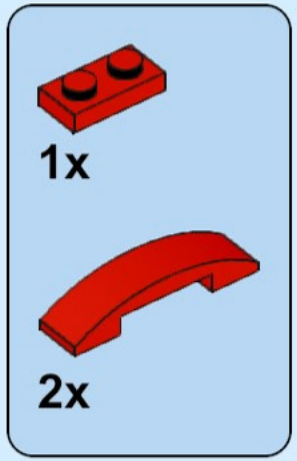


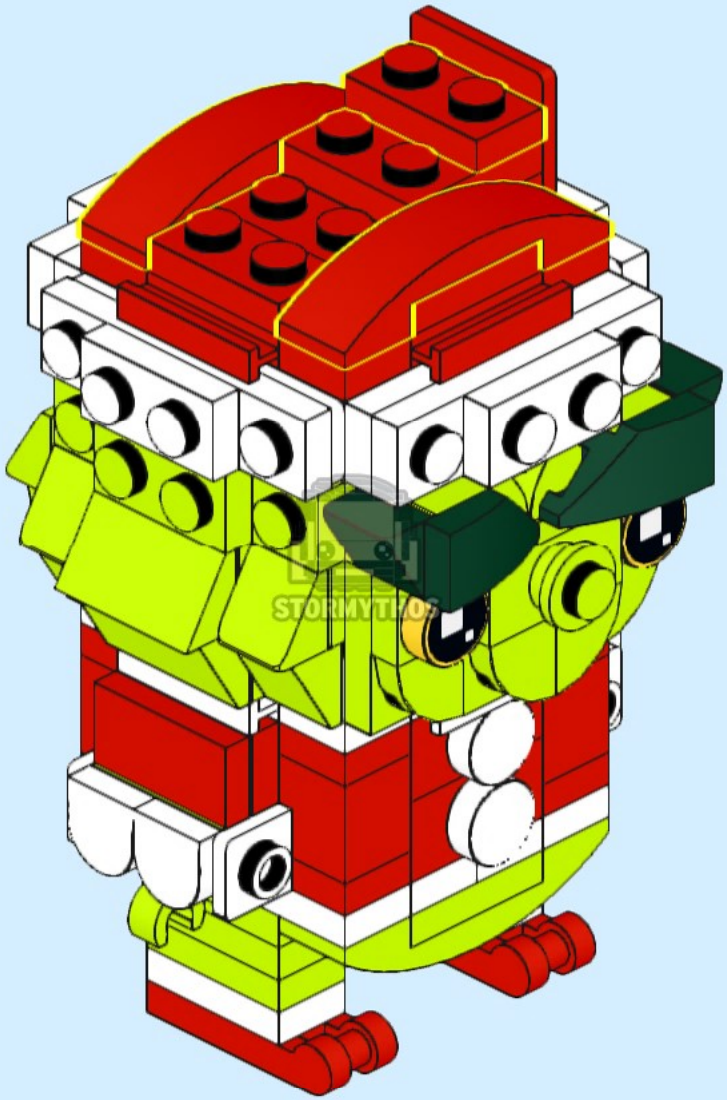

# 36

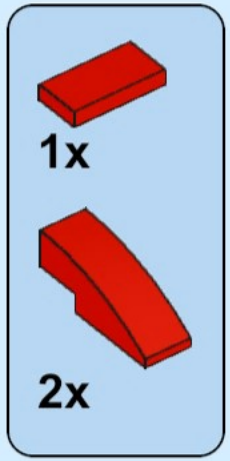


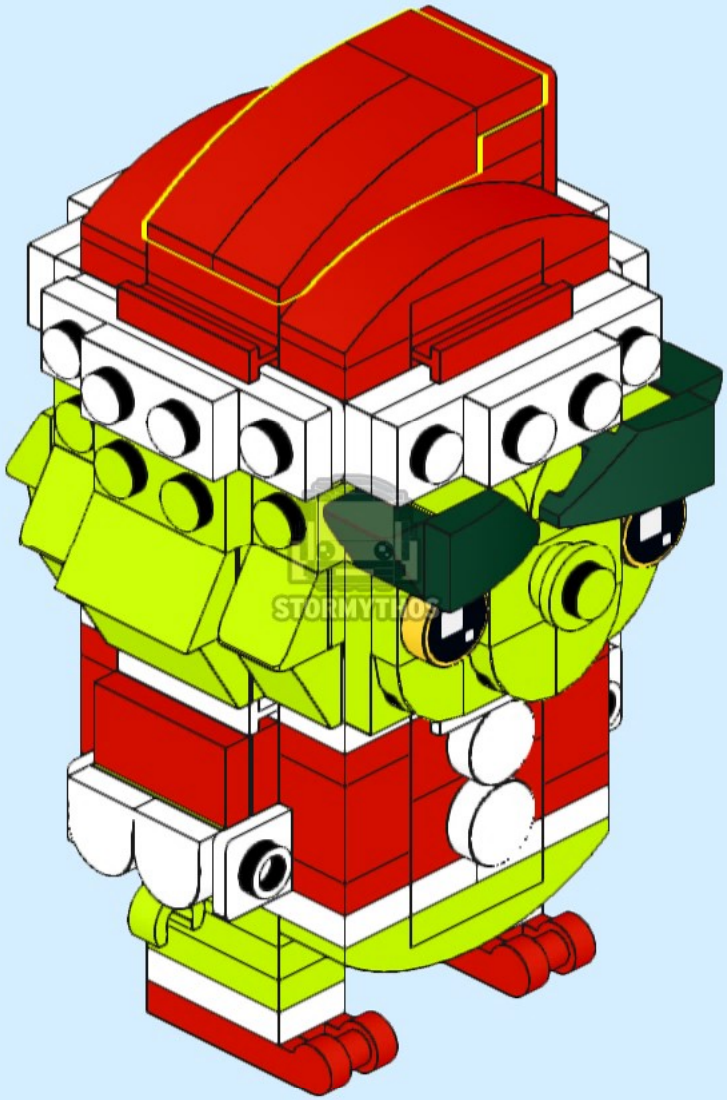

# 37

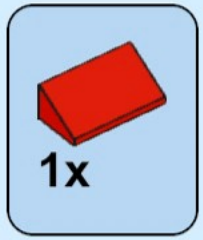


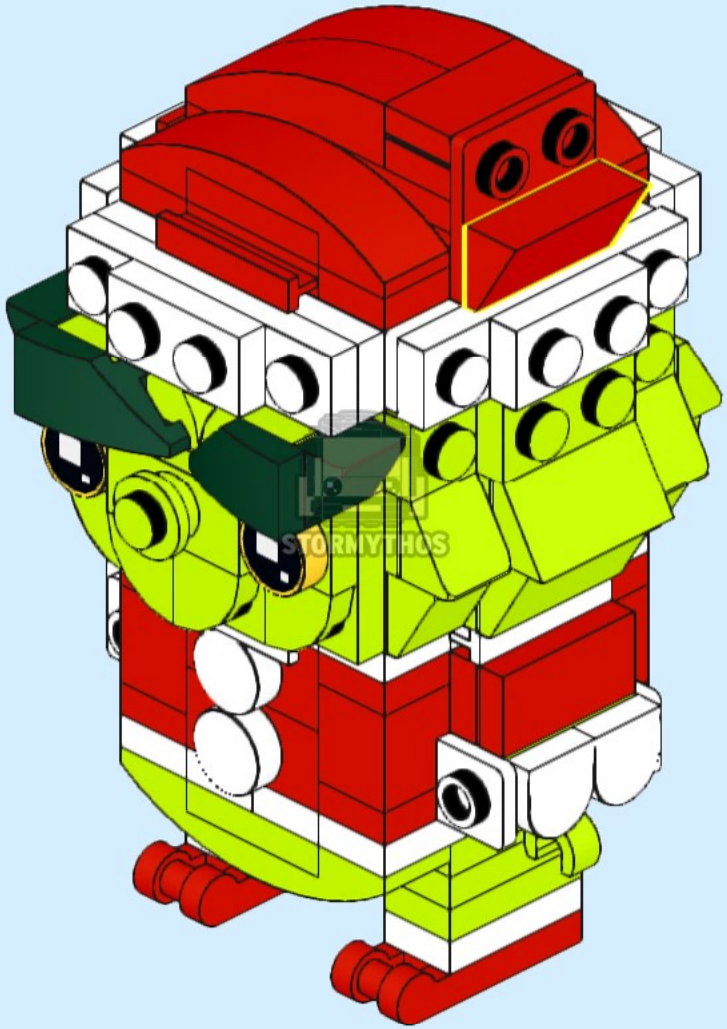

# 38

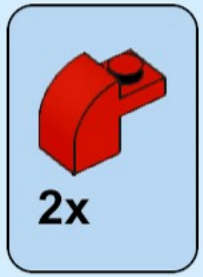


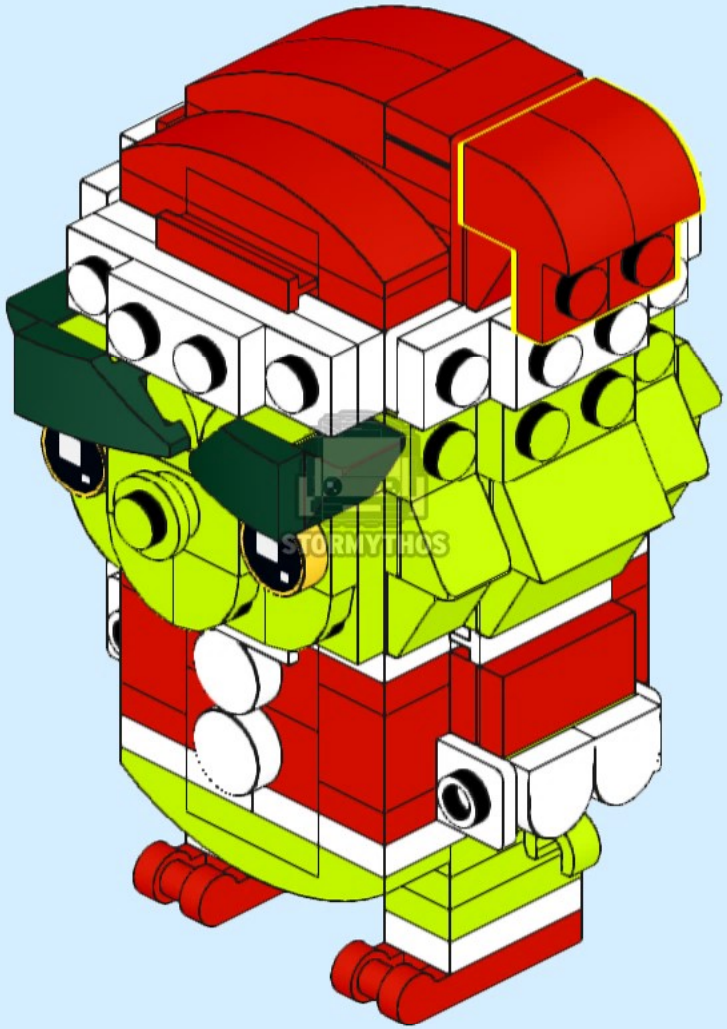

# 39

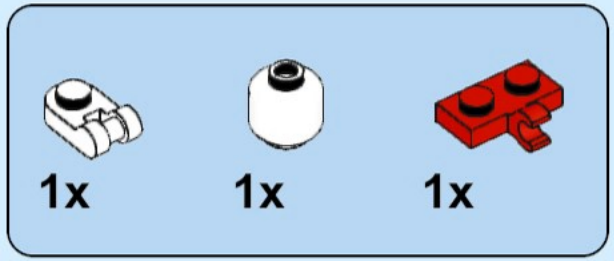


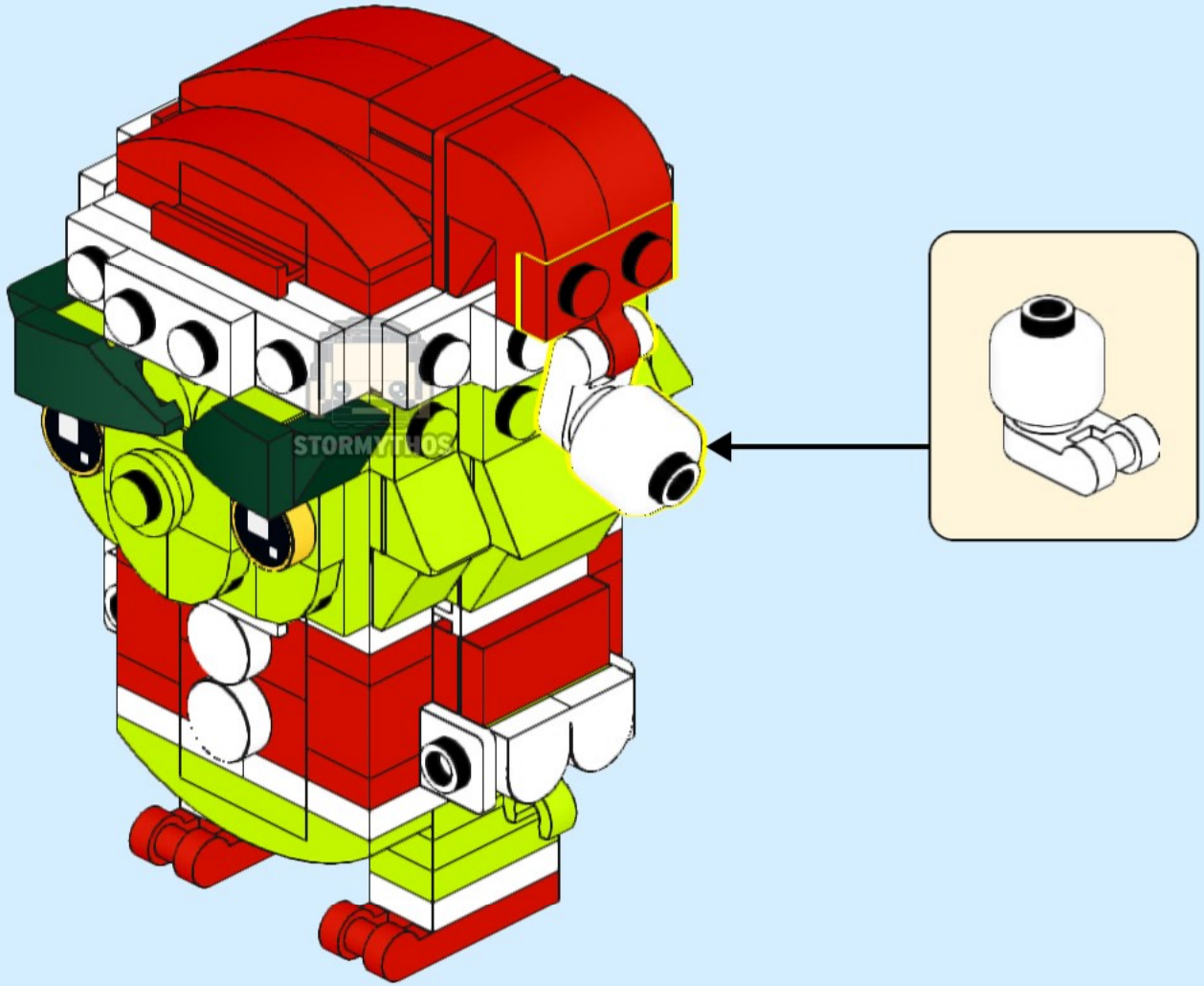

# 40

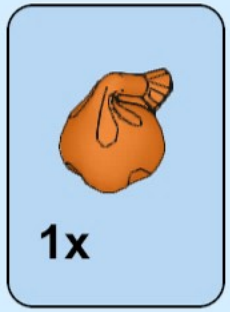


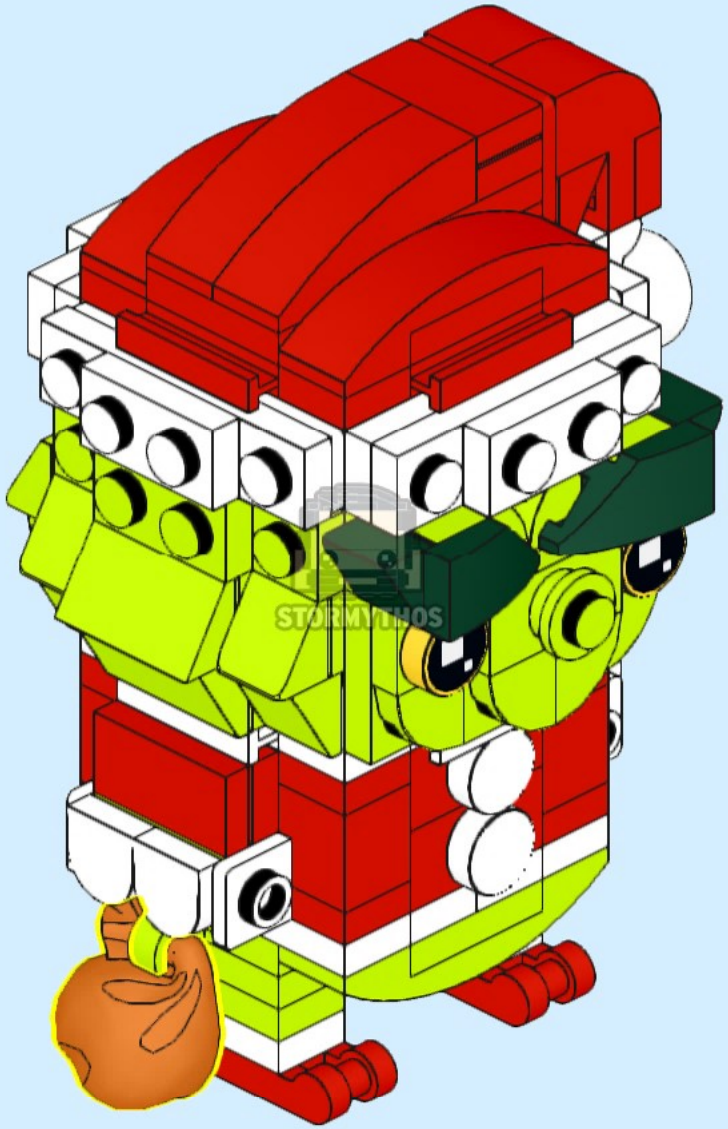

# 41

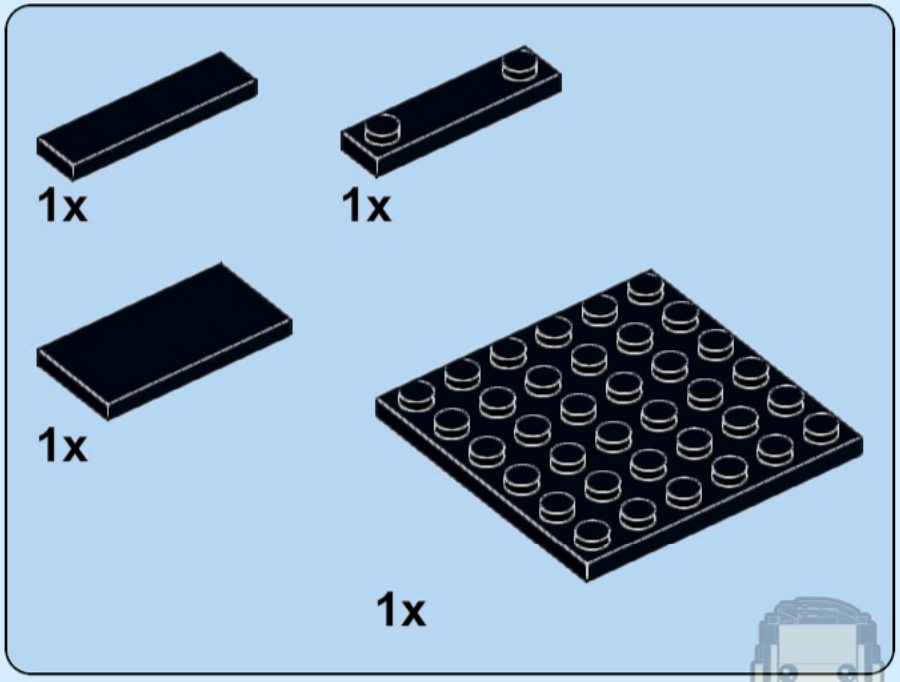


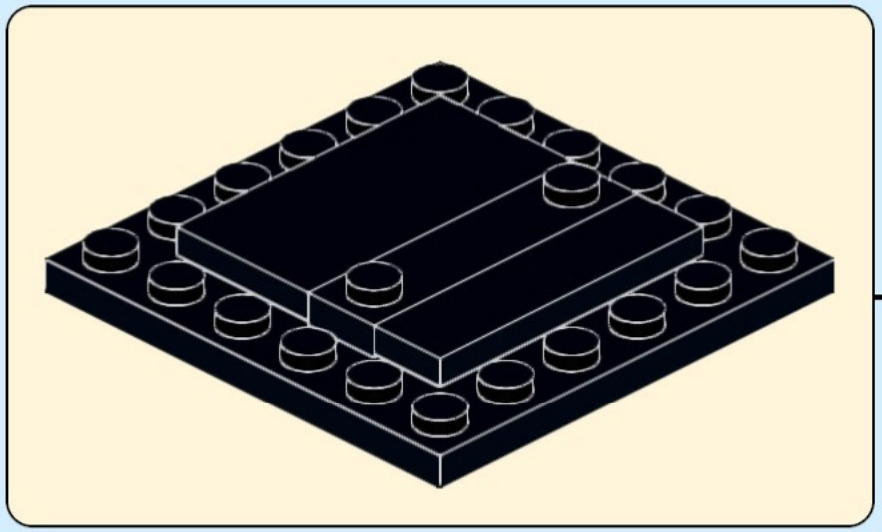

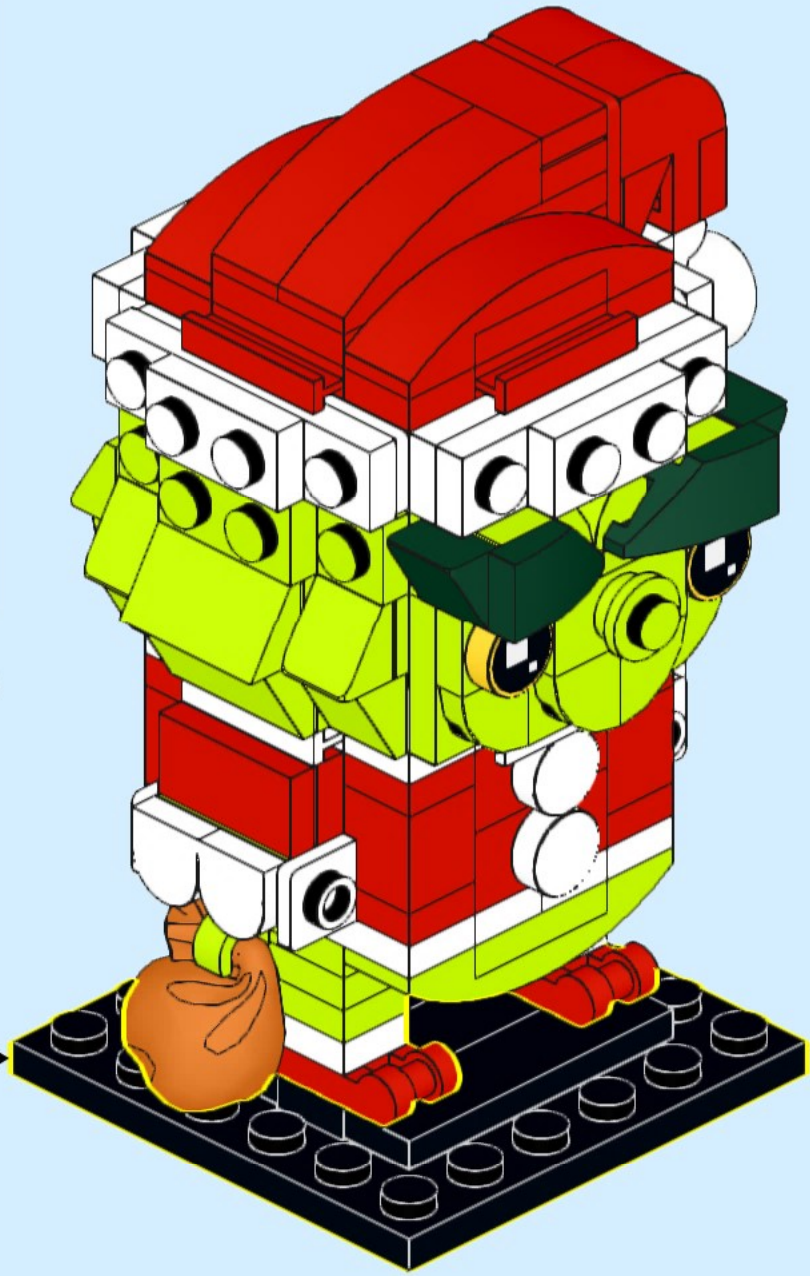

Thanks for building!